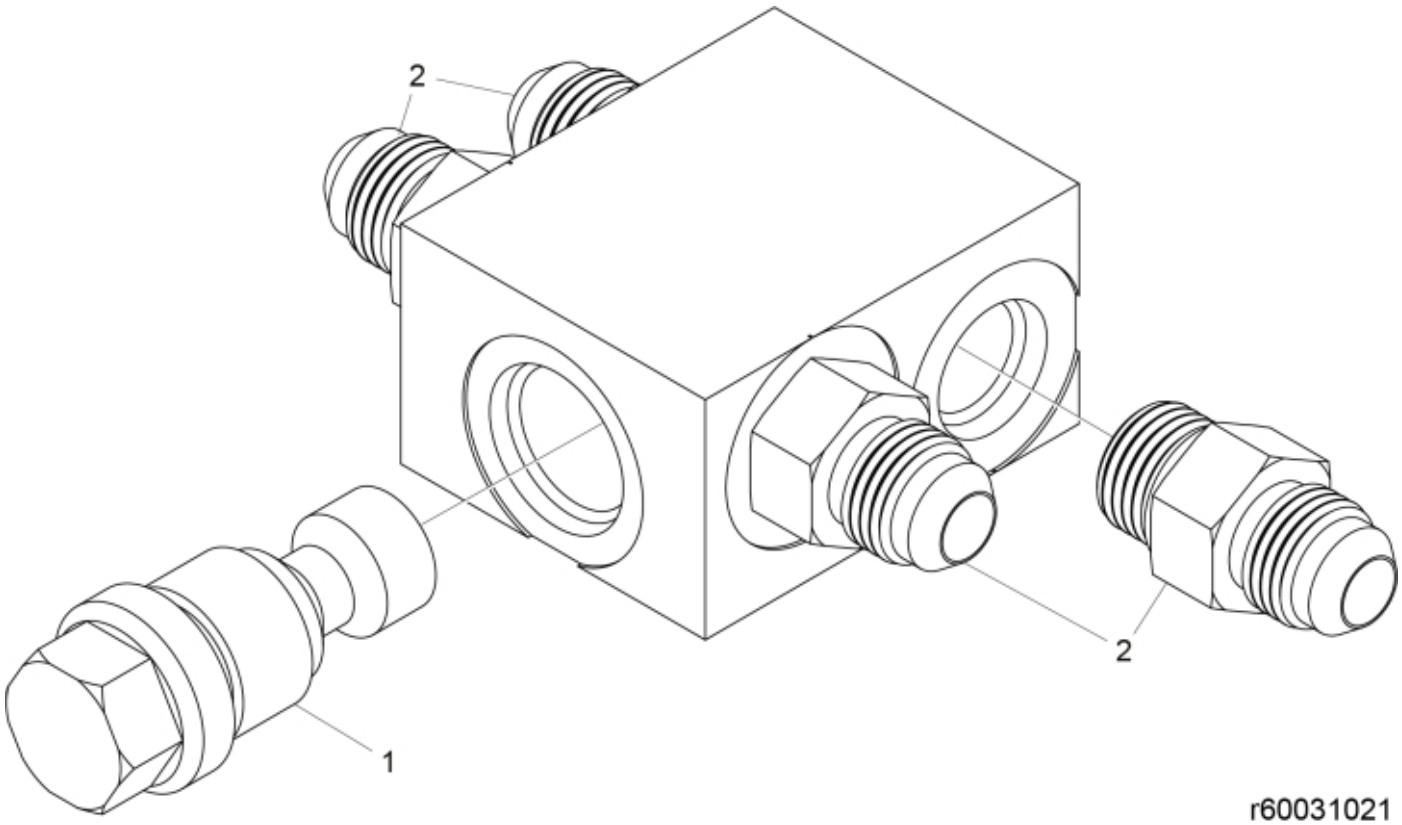

© 2025 Jost

Part assemblies	Relief valve cpl.

PartNo	Pos	Qty	Name	Specifications
5034123	1	1 PCS	Valve	180 bar
5028118	2	4	Adapter short cpl.	9/16" UNF JIC

© 2025 Jost