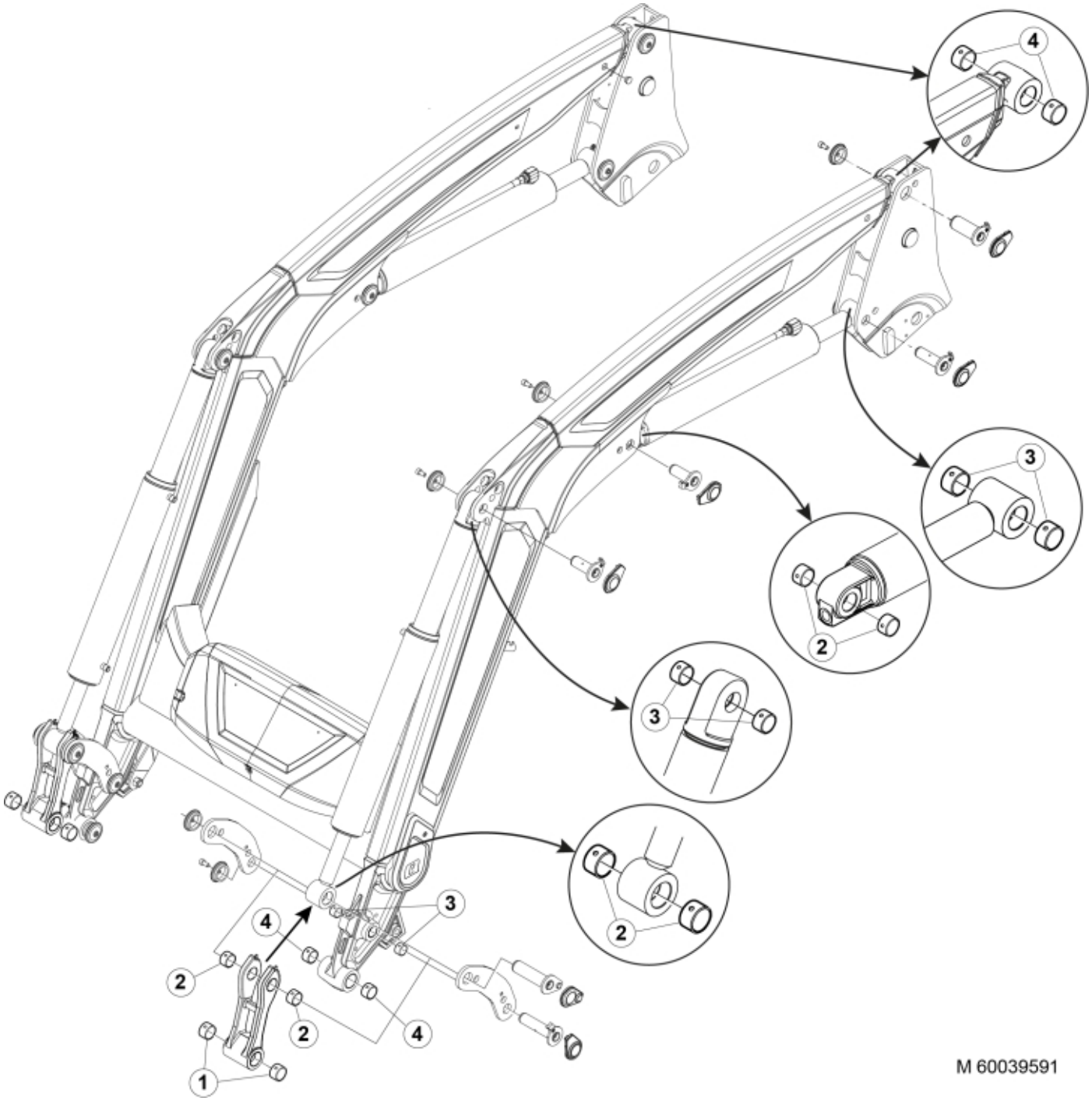

© 2025 Jost

Part assemblies	Bushing kit
Specification	Specification: Q3
	Specification: Q4
	Specification: Q5

PartNo	Pos	Qty	Name	Specifications
60039591		1 PCS	Bushing kit	Q3, Q4, Q5
5018513	1	4	Bushing	D40 L=20
5018514	2	8	Bushing	D35 L=20
5018515	3	16	Bushing	D30 L=20
5018904	4	8	Bushing	D40 L=30

© 2025 Jost