r60039672

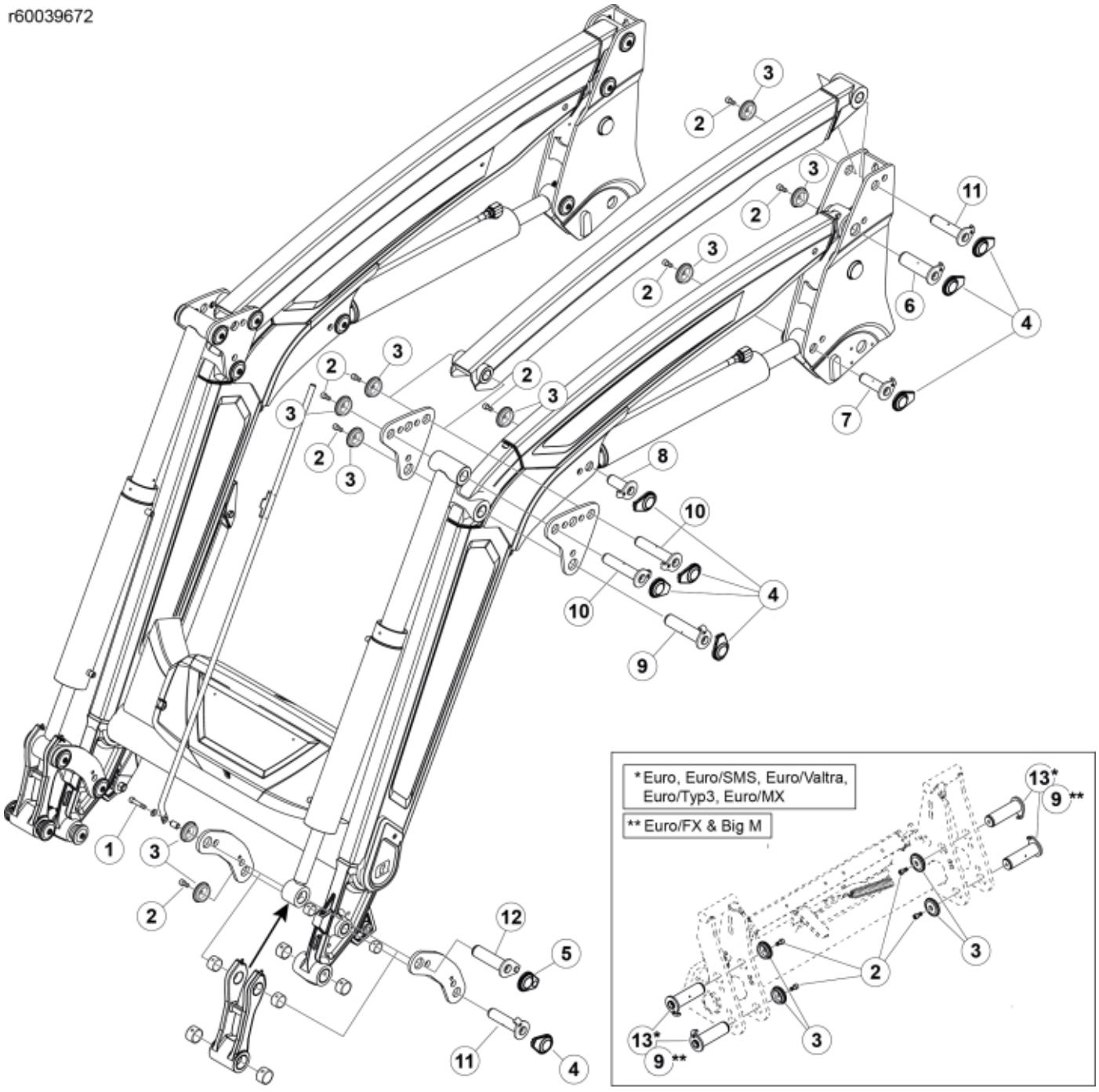

© 2025 Jost

Part assemblies		Pin kit		
Specification		Specification: Q6S-Q8M		
PartNo	**Pos**	**Qty**	**Name**	**Specifications**
60039672		1	Pin kit	Q6S-Q8M
5050605	1	1	Screw	MC6S 10x50 Loc
5050608	2	21	Screw	MC6S M10x20 Loc
5215131	3	22	Locking cover	
60008692	4	20	Plastic cover	
60107382	5	2	Plastic cover	
60004503	6	2	Pivot Pin	D=45, L=129mm
60018058	7	2	Pivot Pin	D=35, L=96mm
60018059	8	2	Pivot Pin	D=35, L84mm
60019828	9	6	Pivot Pin	D=40, L=147mm
60000355	10	4	Pivot Pin	D=35, L=147mm
60018053	11	4	Pivot Pin	D=35, L=127mm
60003248	12	2	Pivot Pin	D=40, L=127
60006415	13	4	Pin	D40 L=134

© 2025 Jost