R 60039681

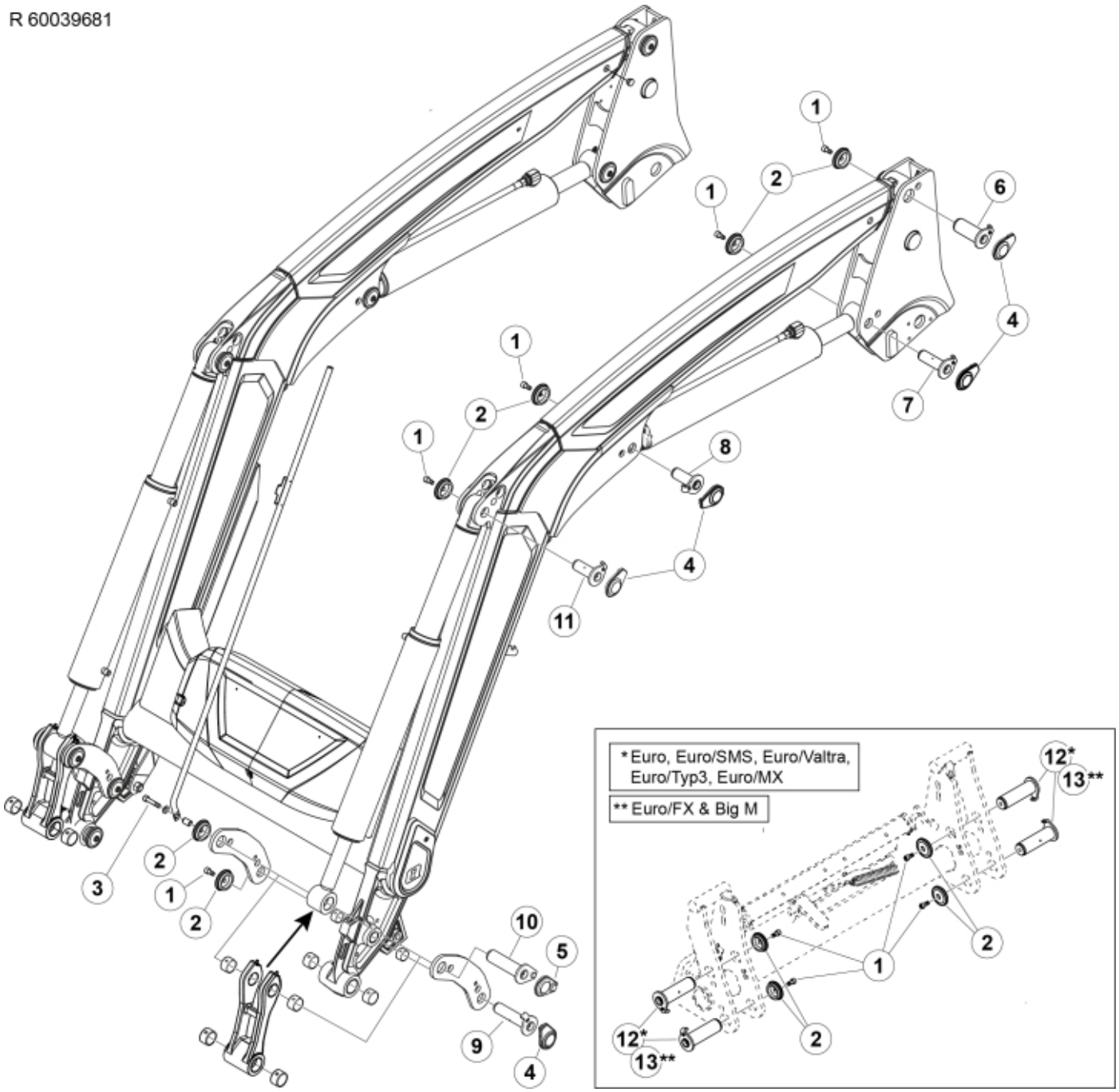

© 2025 Jost

Part assemblies		Pin kit		
Specification		Specification: Q6		
PartNo	**Pos**	**Qty**	**Name**	**Specifications**
60039681		1 PCS	Pin kit	Q6
5050608	1	15	Screw	MC6S M10x20 Loc
5215131	2	16	Locking cover	
5050605	3	1	Screw	MC6S 10x50 Loc
60008692	4	14	Plastic cover	
60107382	5	2	Plastic cover	
60107537	6	2 PCS	Pivot Pin	D=45, L=96
60018058	7	2	Pivot Pin	D=35, L=96mm
60018059	8	2	Pivot Pin	D=35, L84mm
60018053	9	2	Pivot Pin	D=35, L=127mm
60003248	10	2	Pivot Pin	D=40, L=127
60107536	11	2	Pivot Pin	D=35, L=80
60006415	12	4	Pin	D40 L=134
60019828	13	4	Pivot Pin	D=40, L=147mm

© 2025 Jost