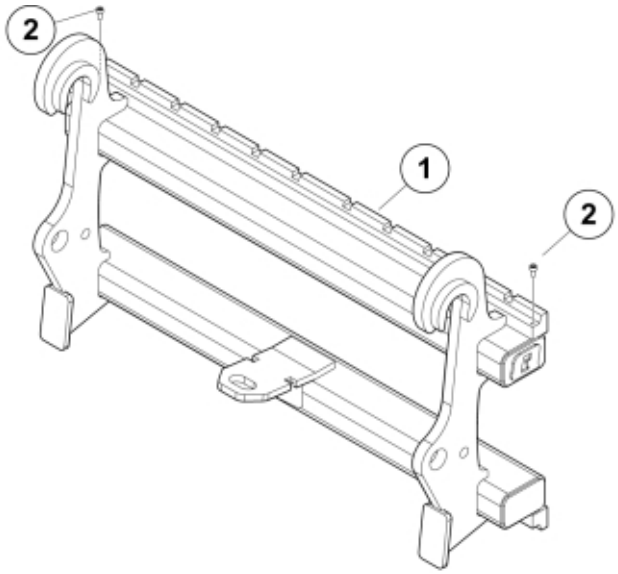

M 11255451
M 11255452
M 11255453

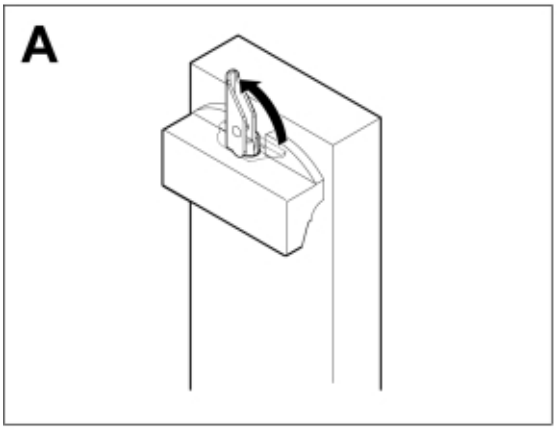

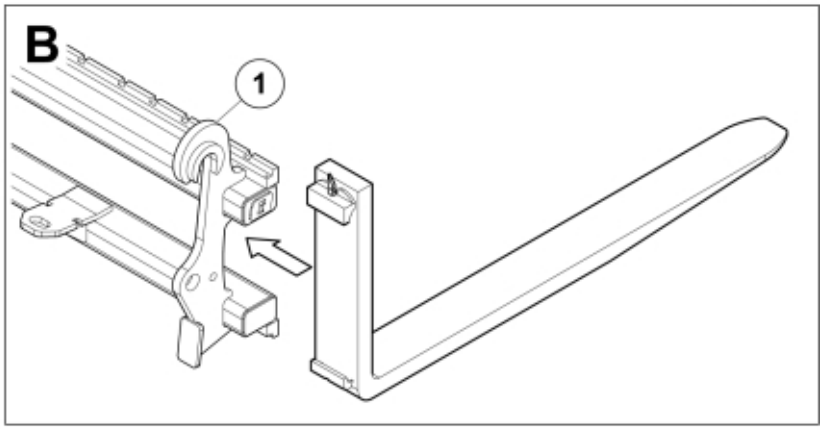

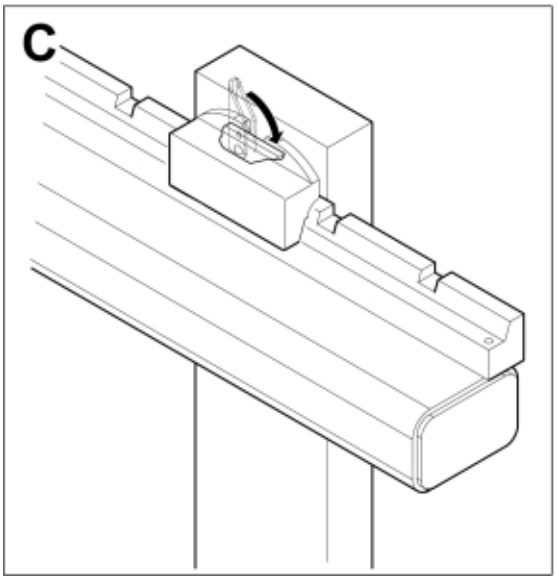

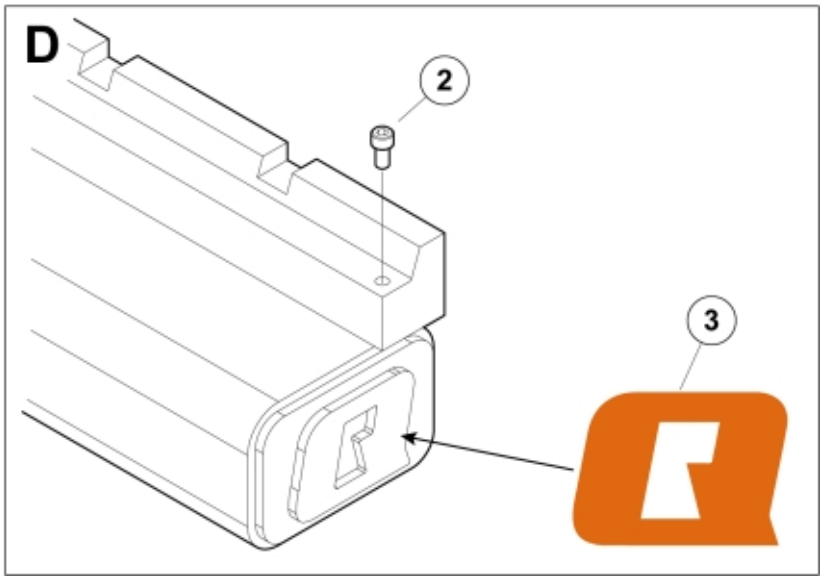

© 2025 Jost

Part assemblies	Pallet fork L 1500 - Dieci medium
Specification	Year From: 1/1/2013 12:00:00 AM

PartNo	Pos	Qty	Name	Specifications
11255452	1	1	Pallet fork L 1500 - Dieci medium	1/1/2013 12:00:00 AM
5004919	2	2	• Screw	MC6S M8x16
60056626	3	2	• Decal	

© 2025 Jost