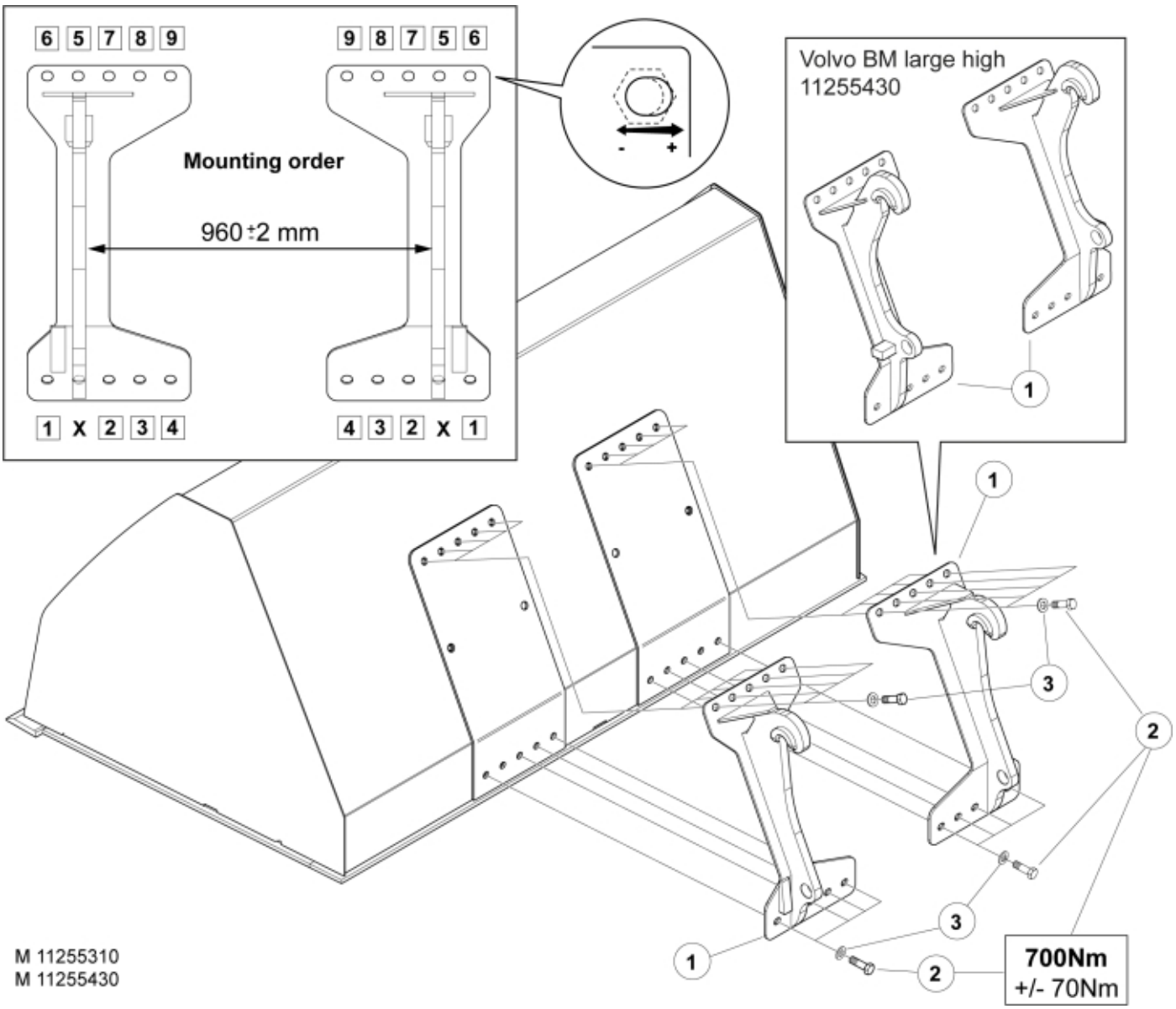
6 5 7 8 9
9 8 7 5 6
Mounting order
960 ±2 mm
1 X 2 3 4
4 3 2 X 1
- +
Volvo BM large high
11255430
1
1
2
3
3
1
2
700Nm
+/- 70Nm
M 11255310
M 11255430

© 2025 Jost

Part assemblies Attachment kit BM Large high

PartNo	Pos	Qty	Name	Specifications
11255430		1	Attachment kit BM Large high	
60042842	1	1 PCS	Attachment BM Large high	
60029905		1	Screw kit	
5051392	2	20	• Screw	M6S 24X75 (8.8)
5051393	3	20	• Washer	M24 Broad Wedge-Lock

© 2025 Jost