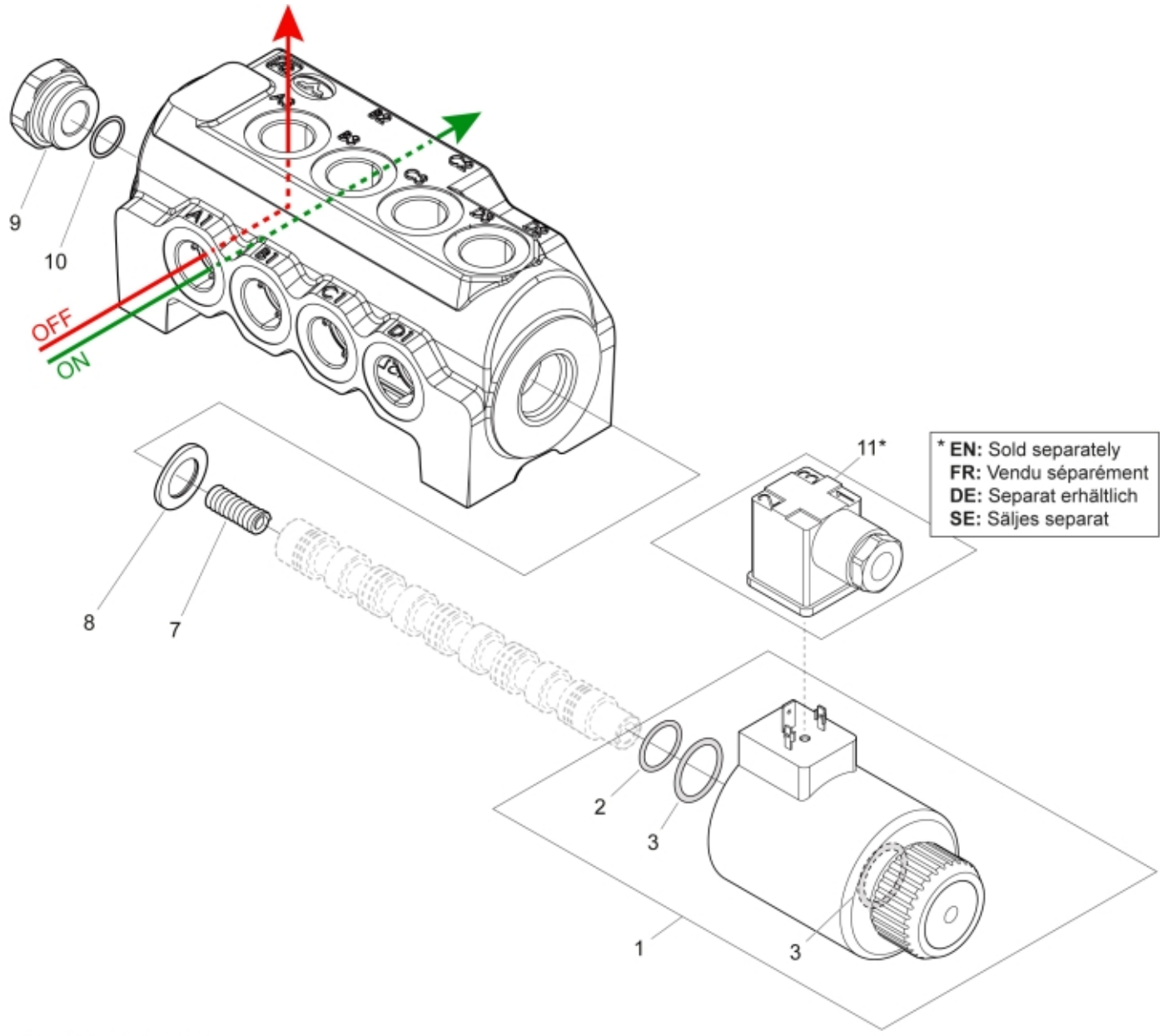

M 4501091_60029815

© 2025 Jost

Part assemblies	Diverter valve 12/2 El
Specification	Specification: Incl. 60029815

PartNo	Pos	Qty	Name	Specifications
4501091		1	Diverter valve 12/2 El	Incl. 60029815
60029815		1	Diverter valve 12/2 El	SP# 4501091
4501276	1	1	• Solenoid kit	
5037016	2	1	•• O-ring	23.47x2.62
5037058	3	2	•• O-ring	29.87x1.78
516113	7	1	• Spring	
516138	8	1	• Washer	
516142	9	1	• Plug	
5037016	10	1	• O-ring	23.47x2.62
5024376	11*	1	Connector	Sold Separately

© 2025 Jost