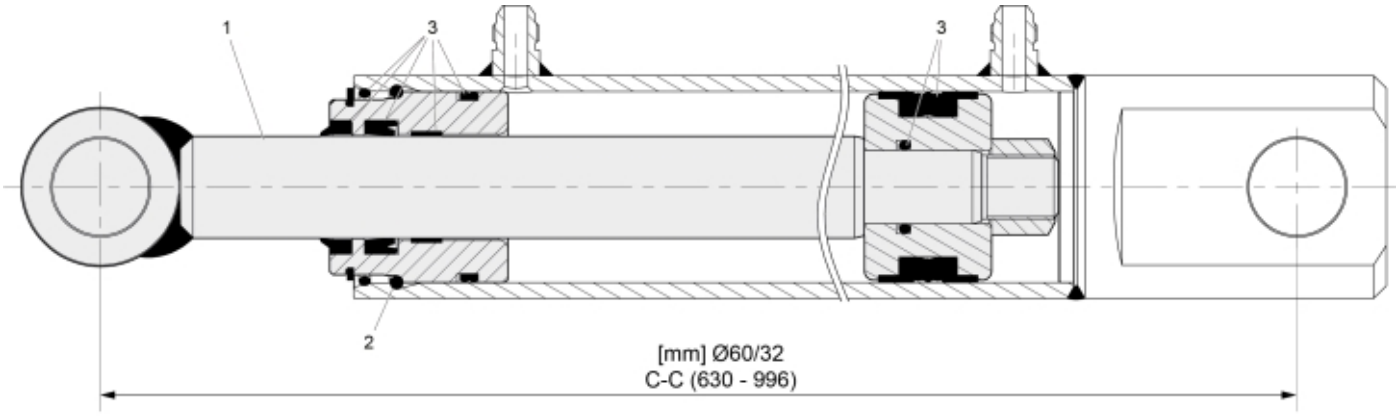

r60028208

© 2025 Jost

Description	60/32
Part assemblies	Lift Cylinder
Specification	Year To: 7/31/2022 12:00:00 AM

PartNo	Pos	Qty	Name	Specifications
60046670	1	1	Piston rod cpl.	
5017000	2	1	• Retaining ring	
60046663	3	1	Seal kit	

© 2025 Jost