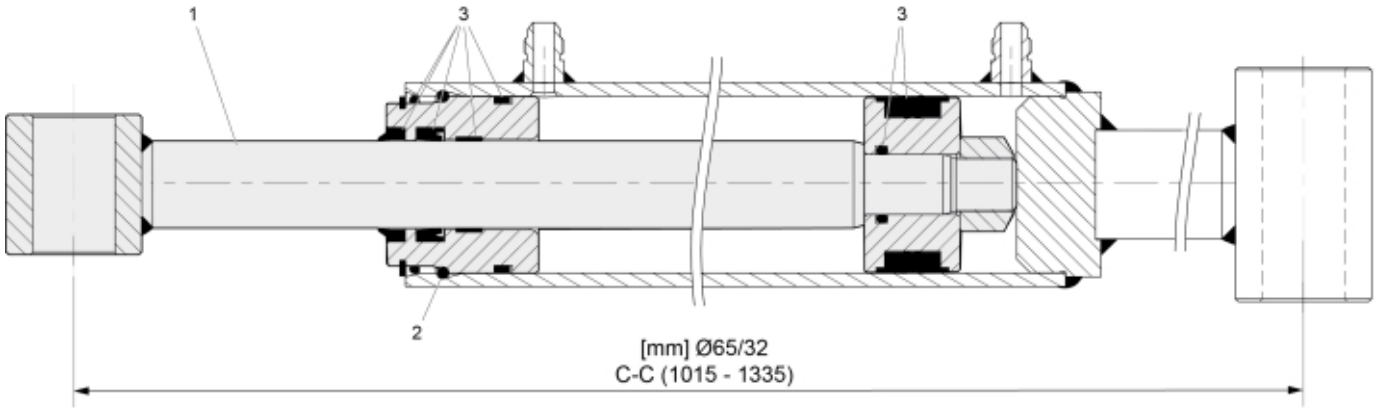

r60028270

© 2025 Jost

Description	65/32
Part assemblies	Tilt Cylinder
Specification	Specification: Glossy Black
	Year To: 11/10/2021 12:00:00 AM

PartNo	Pos	Qty	Name	Specifications
60046681	1	1	Piston rod cpl.	
5016668	2	1	• Retaining ring	
60046666	3	1	Seal kit	

© 2025 Jost