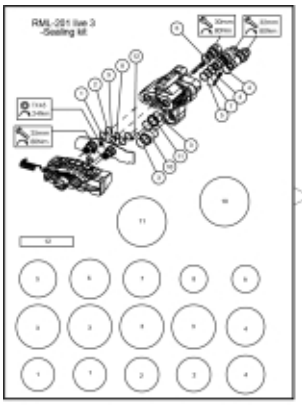

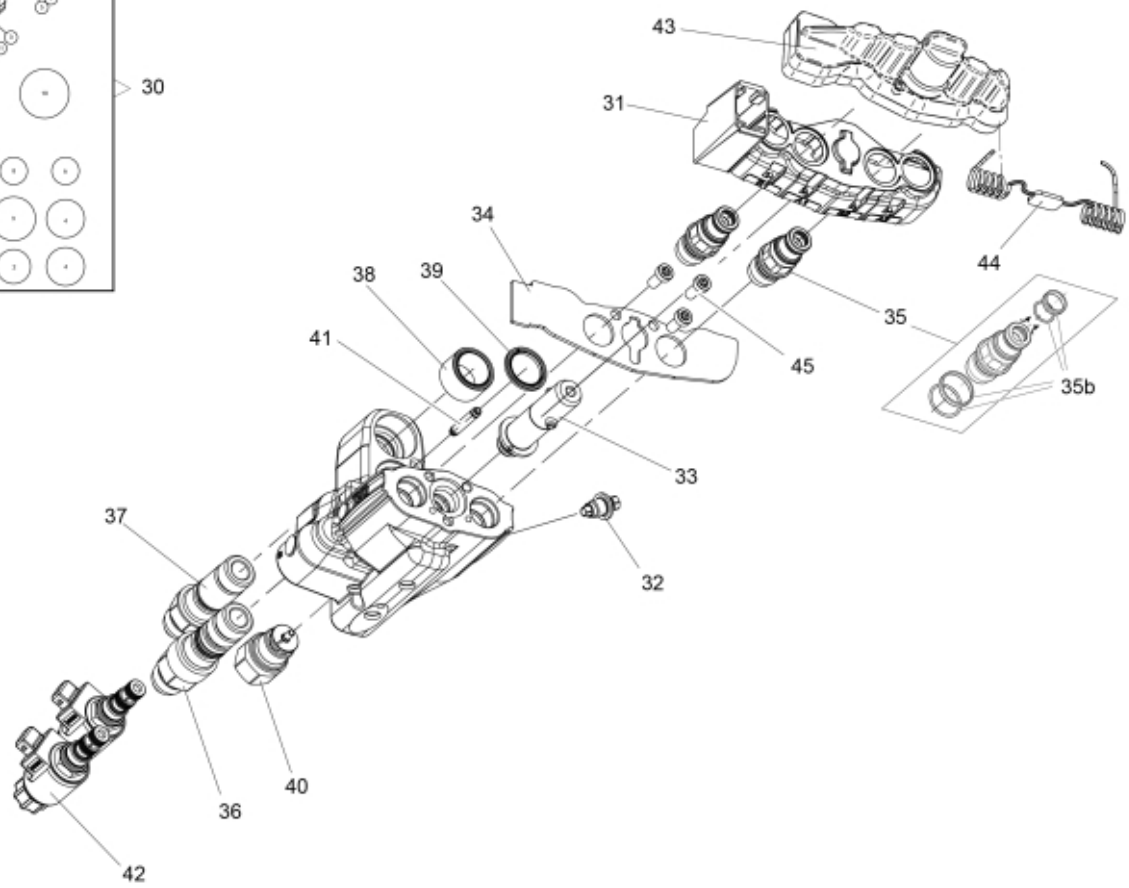

r10570171

© 2025 Jost

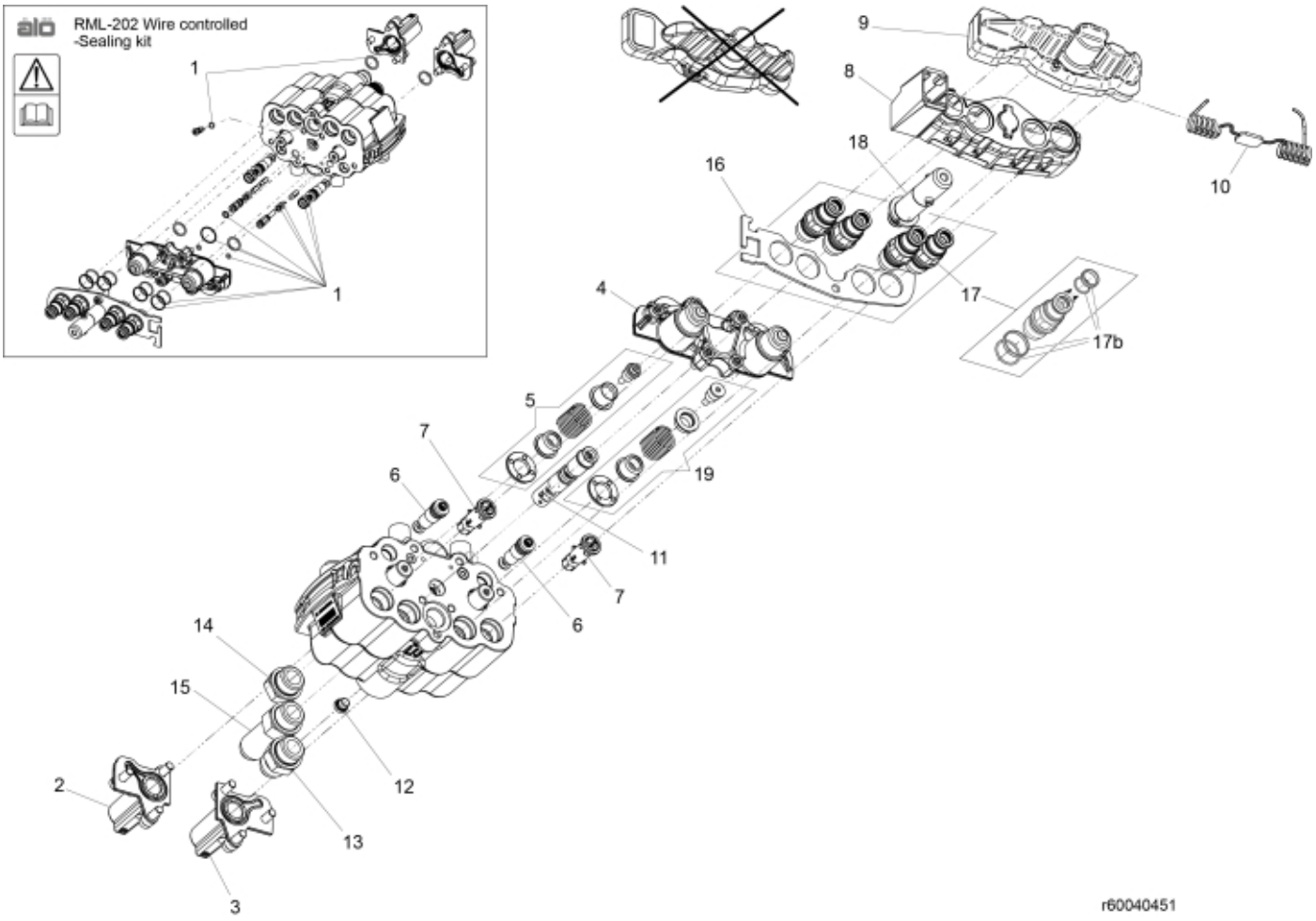
RML-202 Wire controlled
-Sealing kit
1
1
9
8
18
16
10
4
17
17b
5
7
6
19
11
7
6
14
15
12
2
13
3
r60040451

© 2025 Jost

Part assemblies Valve Ergo+Live3 M. LS

PartNo	Pos	Qty	Name	Specifications
60040451		1 PCS	Valve Ergo+Live3 M. LS	
4501263	1	1	Seal kit	ErgoDrive LCS
10570082	2	1 PCS	Cap LH	
10570081	3	1 PCS	Cap RH	
60008696	4	1 PCS	Top cap	(10570080)
10570079	5	1 PCS	Spool control	
10570069	6	2	Check valve cpl.	Part is included in kit 10570154 Valve STM Professional Live3 OC
10570071	7	2	Check valve cpl.	Part is included in kit 10570154 Valve STM Professional Live3 OC
10570096	8	1	Cap w. marking	Part is included in kit 10570154 Valve STM Professional Live3 OC, Part is included in kit 10570154 Valve STM Professional Live3 OC
5034232	9	1	Cover	Replaces 5033905
10570094	10	1	• Cable tie	
10570181	11	1	Spool LS cpl.	(10570073)
5028093	12	1	Plug PG01 cpl.	
5028086	13	1	Adapter cpl.	Part is included in kit 10570154 Valve STM Professional Live3 OC
5028092	14	1	Adaptor	BSP3/4"- JIC9/16
5028087	15	1	Adapter long cpl.	
10570088	16	1	Cover plate	
4500294	17	4	Coupling (M)	Replaces 5044956/60017561
4501264	17b	1	• Seal kit	1 seal kit/coupling required
10570078	18	1	Adapter Multi coupling	
5040064	30	1	Seal kit	
10570096	31	1	Cap w. marking	Part is included in kit 10570154 Valve STM Professional Live3 OC, Part is included in kit 10570154 Valve STM Professional Live3 OC
10570070	32	1 PCS	Check valve cpl.	
10570078	33	1	Adapter Multi coupling	
10570090	34	1 PCS	Cover plate Single 2	
4500294	35	2	Coupling (M)	Replaces 5044956/60017561
4501264	35b	1	• Seal kit	1 seal kit/coupling required
5028090	36	1 PCS	Adapter with sealing	
5028089	37	1 PCS	Adapter with sealing	
5040066	38	1 PCS	Sealing sleeve cpl.	
5040065	39	1 PCS	Sealing sleeve cpl.	
10570074	40	1 PCS	Spool control unit cpl.	
10570075	41	1 PCS	Connecting pipe cpl.	
10570093	42	2	Solenoid	
5034232	43	1	Cover	Replaces 5033905
10570094	44	1	• Cable tie	
5006019	45	1	Screw	8x16 fzb

© 2025 Jost