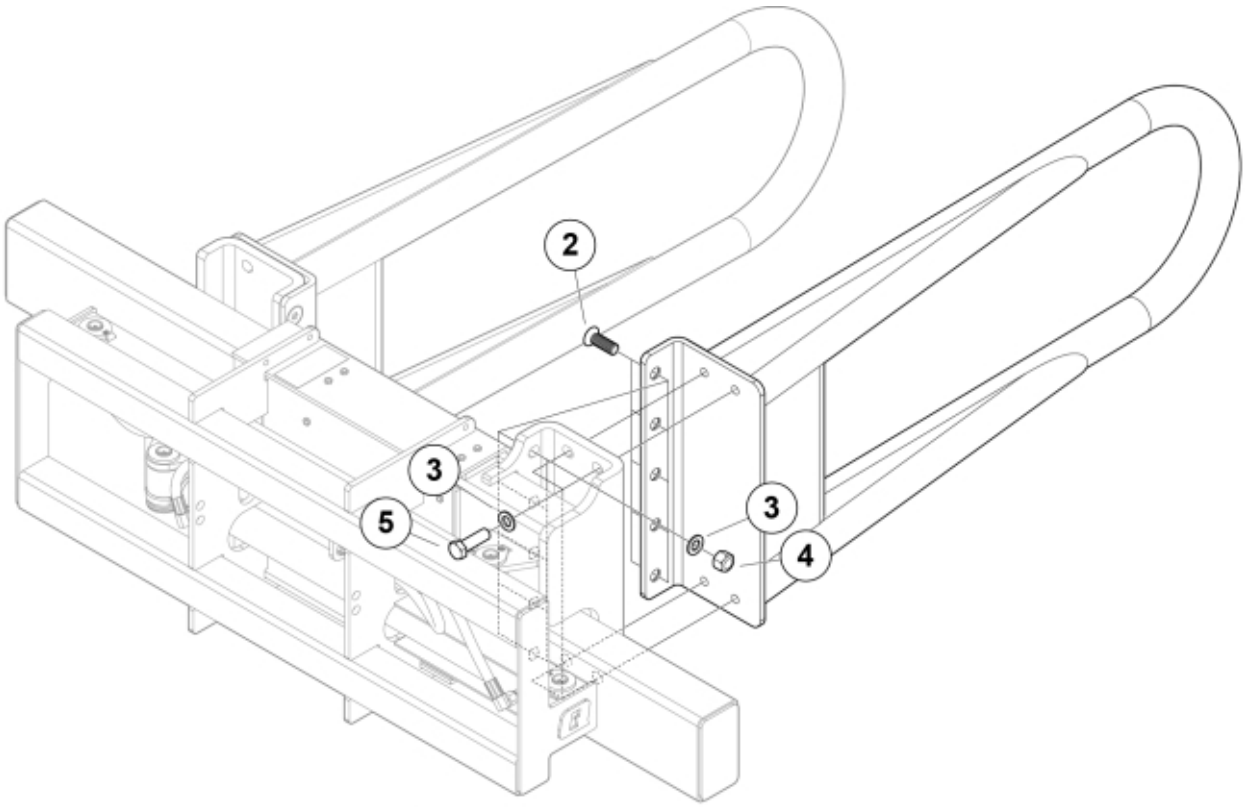

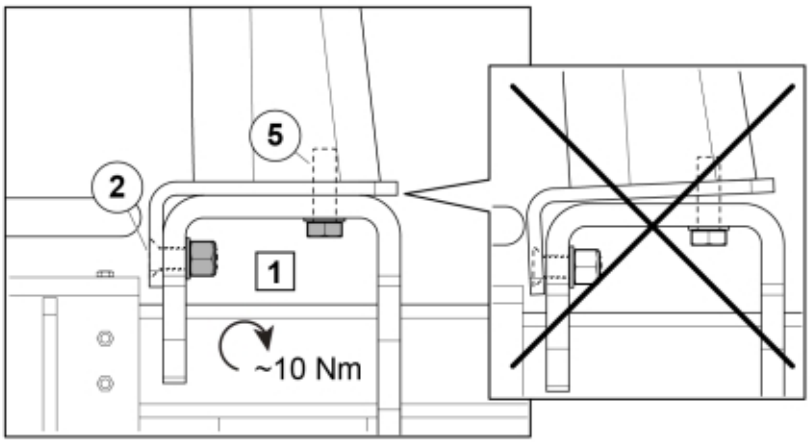

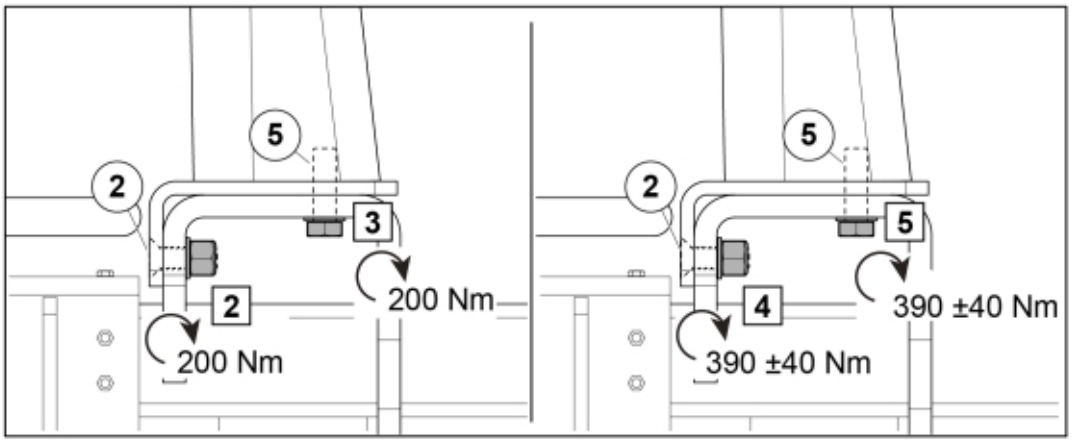

M 60044057-11257112

© 2025 Jost

Part assemblies	Quadrogrip TS Arm - Long (1600mm)
Specification	Year To: 4/8/2026 12:00:00 AM

PartNo	Pos	Qty	Name	Specifications
60044058		1 PCS	Quadrogrip TS Arm - Long (1600mm)	
5051142	2	5 PCS	Screw	MF6S M20X60 (8.8), Part is included in kit 11255096 Attachment kit Merlo
5013127	3	8	Washer	BRB 21 x 36 x 3, Part is included in kit 11255096 Attachment kit Merlo
5011559	4	5	Nut	Loc-king M20x2,5 (10), Part is included in kit 11255098 Attachment kit Dieci Large, 11255234 Attachment kit Dieci Medium, 11255238 Attachment kit Dieci Small, 11255241 Attachment kit JLG Deutz, 11255233 Attachment kit Schäffer type SWH, 11255326 Attachment kit Weidemann, 11255184 Attachment kit CAT TH, 11255096 Attachment kit Merlo
5002916	5	4 PCS	Screw	M6S M20 x 65 (8.8)

© 2025 Jost