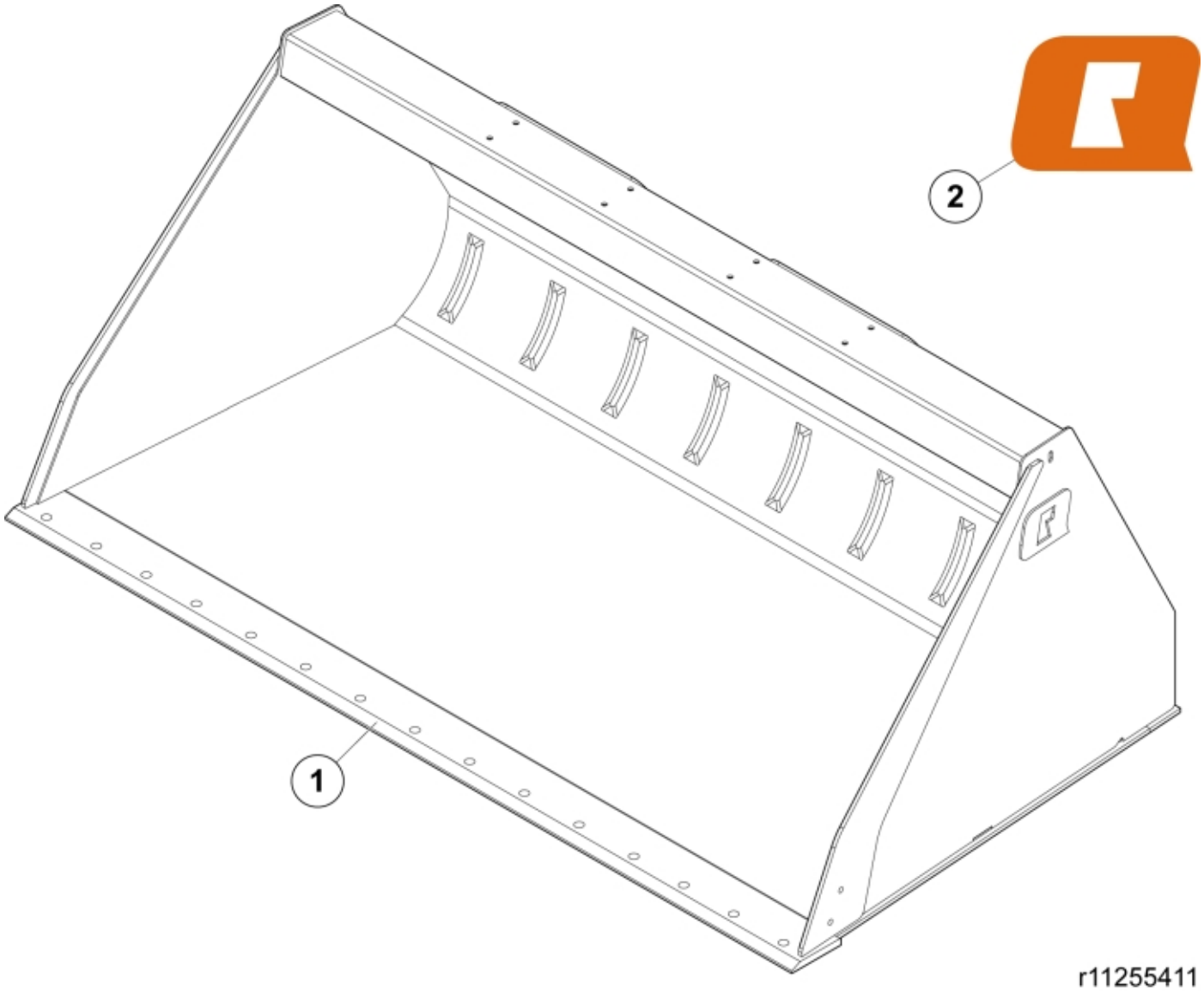

© 2025 Jost

Part assemblies	Bucket GL+ 180
Specification	Year From: 1/1/2020 12:00:00 AM
	Year To: 4/30/2024 12:00:00 AM

PartNo	Pos	Qty	Name	Specifications
11255475		1	Bucket GL+ 180	1/1/2020 12:00:00 AM, 4/30/2024 12:00:00 AM
60041660	1	1 PCS	Cutting edge	
60056248	2	2	Decal	"Q" Large 158 mm
5022119		2	Plug	

© 2025 Jost