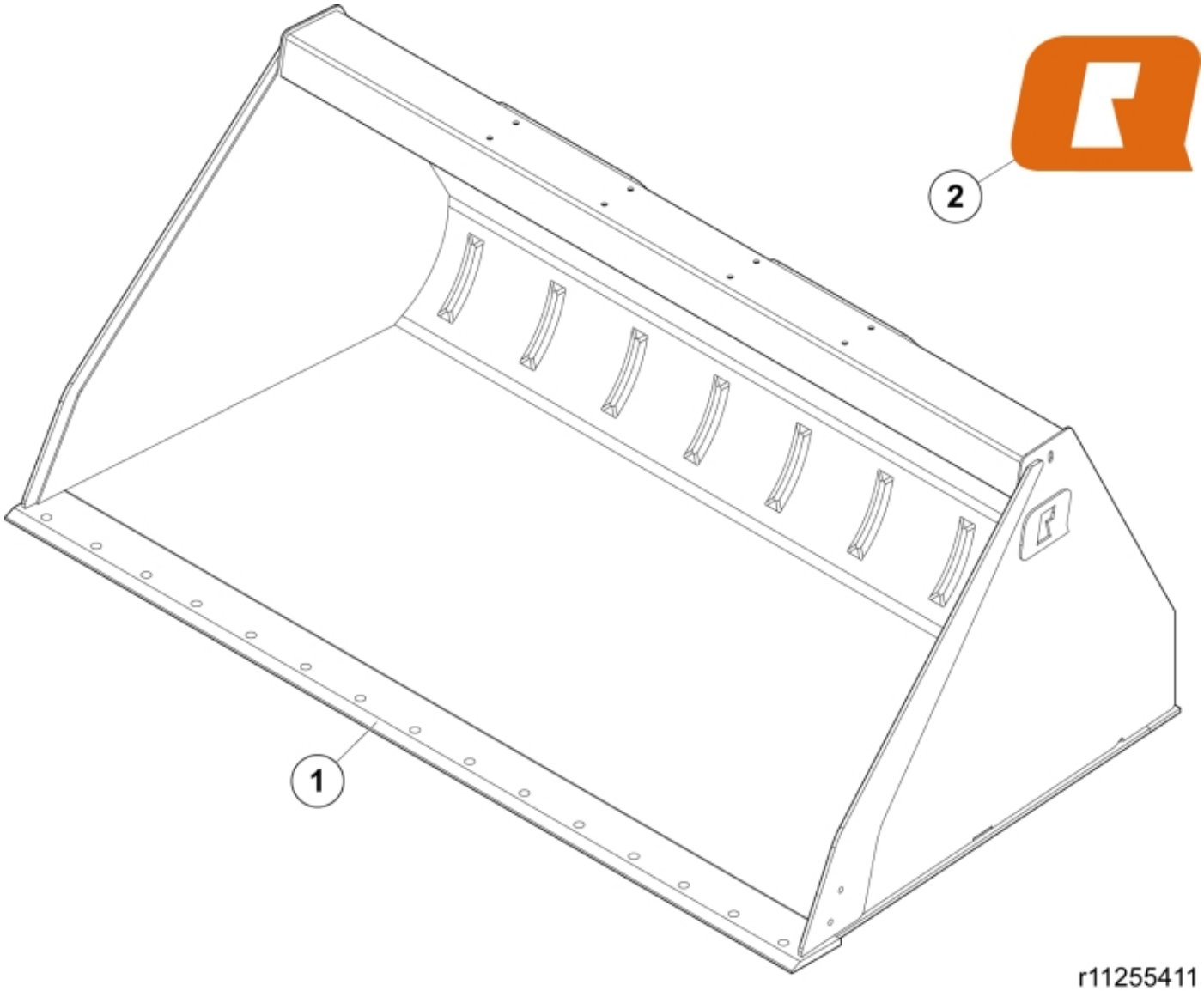

© 2025 Jost

Part assemblies	Bucket GL+ 260
Specification	Year From: 1/1/2020 12:00:00 AM

PartNo	Pos	Qty	Name	Specifications
11255476		1	Bucket GL+ 260	1/1/2020 12:00:00 AM
60044982	1	1 PCS	Cutting edge	
60056248	2	2	Decal	"Q" Large 158 mm
5022119		2	Plug	

© 2025 Jost