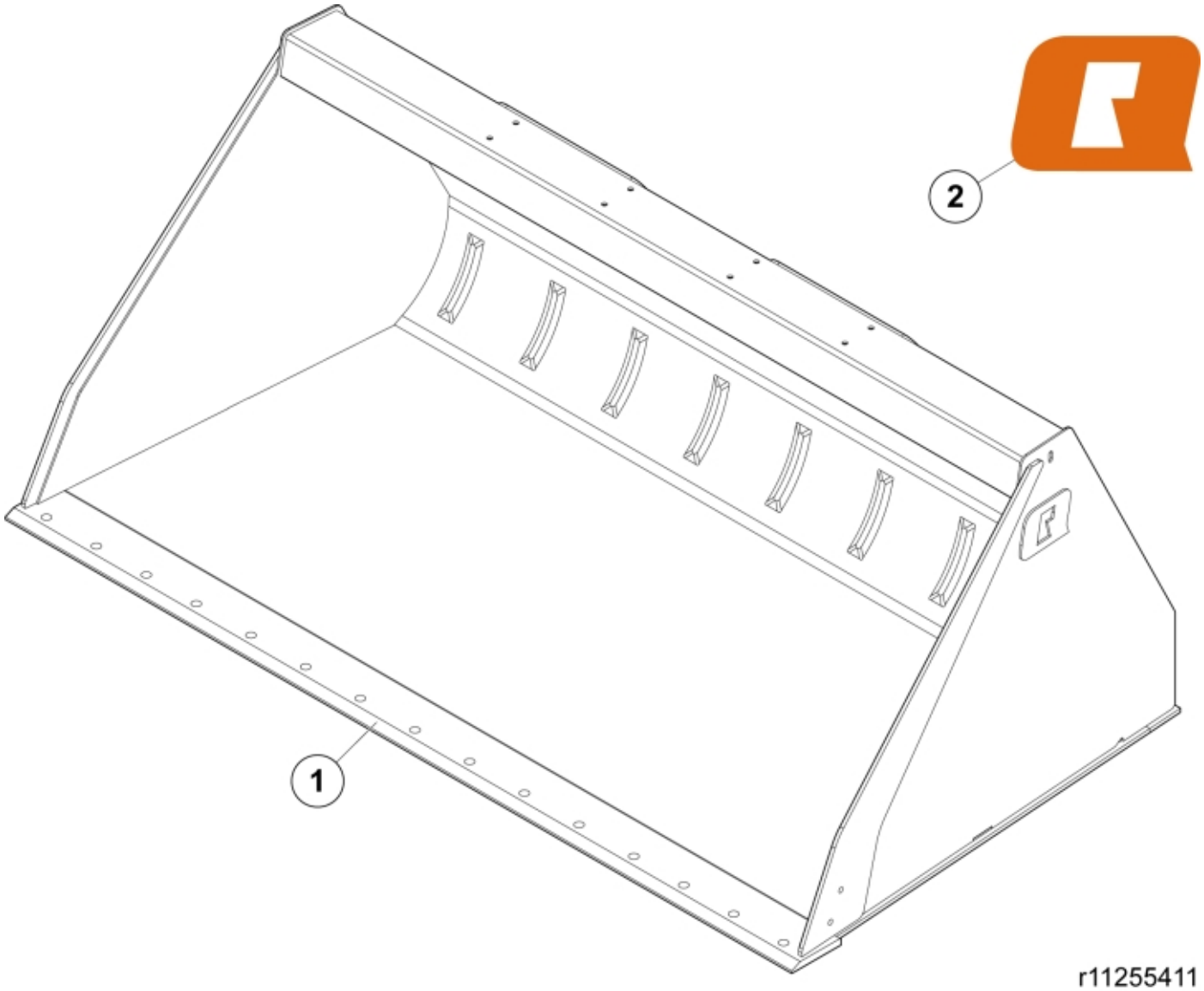



© 2025 Jost

| | |
|---|---|
| **Part assemblies** | Bucket GXL+ 260 |
| **Specification** | Year From: 10/1/2018 12:00:00 AM |

| PartNo | Pos | Qty | Name | Specifications |
|---|---|---|---|---|
| 11255479 | | 1 | Bucket GXL+ 260 | 10/1/2018 12:00:00 AM |
| 60044982 | 1 | 1 PCS | Cutting edge | |
| 60056248 | 2 | 2 | Decal | "Q" Large 158 mm |
| 5022119 | | 2 | Plug | |


© 2025 Jost