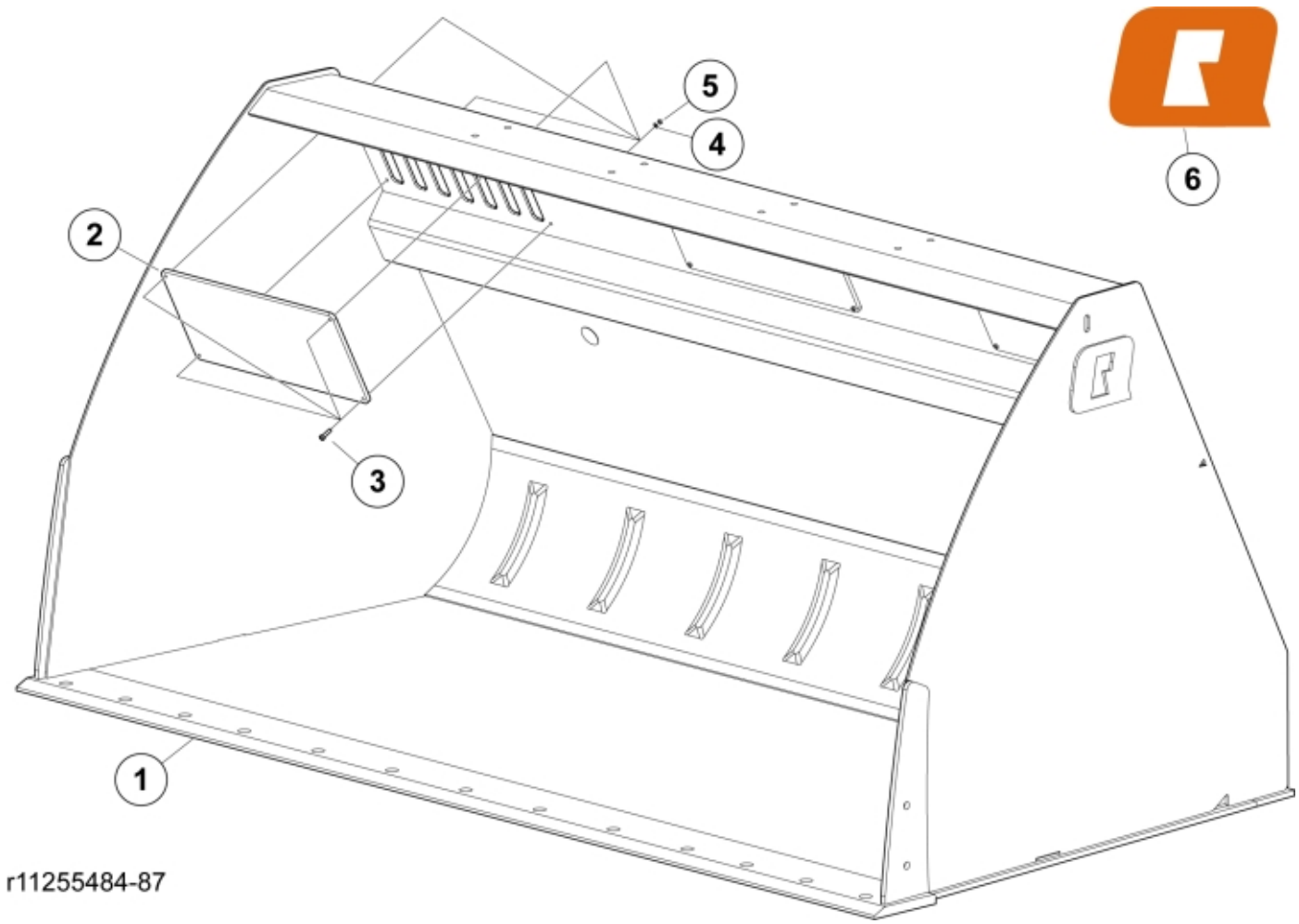

r11255484-87

© 2025 Jost

Part assemblies	Bucket VL+ 220 Euro
Specification	Year From: 1/1/2020 12:00:00 AM

PartNo	Pos	Qty	Name	Specifications
11255485		1	Bucket VL+ 220 Euro	1/1/2020 12:00:00 AM
60044937	1	1 PCS	Cutting edge	
60048161	2	3 PCS	Plastic cover	
5002027	3	12	Screw	M6S M6X25 (8.8)
5013108	4	12	Washer	BRB 6,4 x 12 x 1,5
20708137	5	12	Nut	M6 FZB, 708137
60056248	6	2	Decal	"Q" Large 158 mm
5022119		2	Plug	

© 2025 Jost