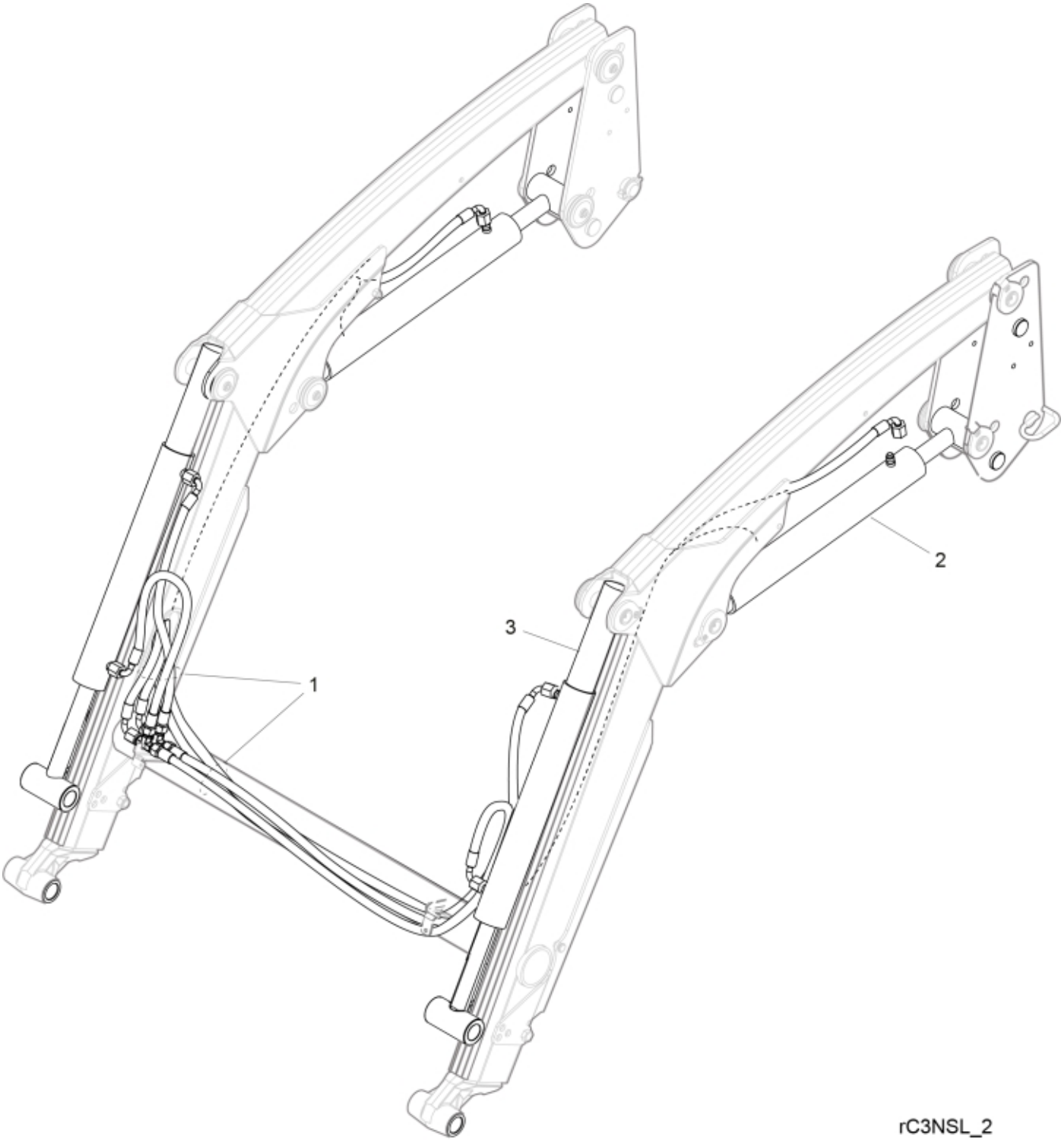

© 2025 Jost

Part assemblies Hydraulics

PartNo	Pos	Qty	Name	Specifications
- - -	1	1	Main hose kit	See separate part list
60074035-1	2	2	Lift Cylinder	9/15/2022 12:00:00 AM
60074072-1	3	2	Tilt Cylinder	9/15/2022 12:00:00 AM

© 2025 Jost