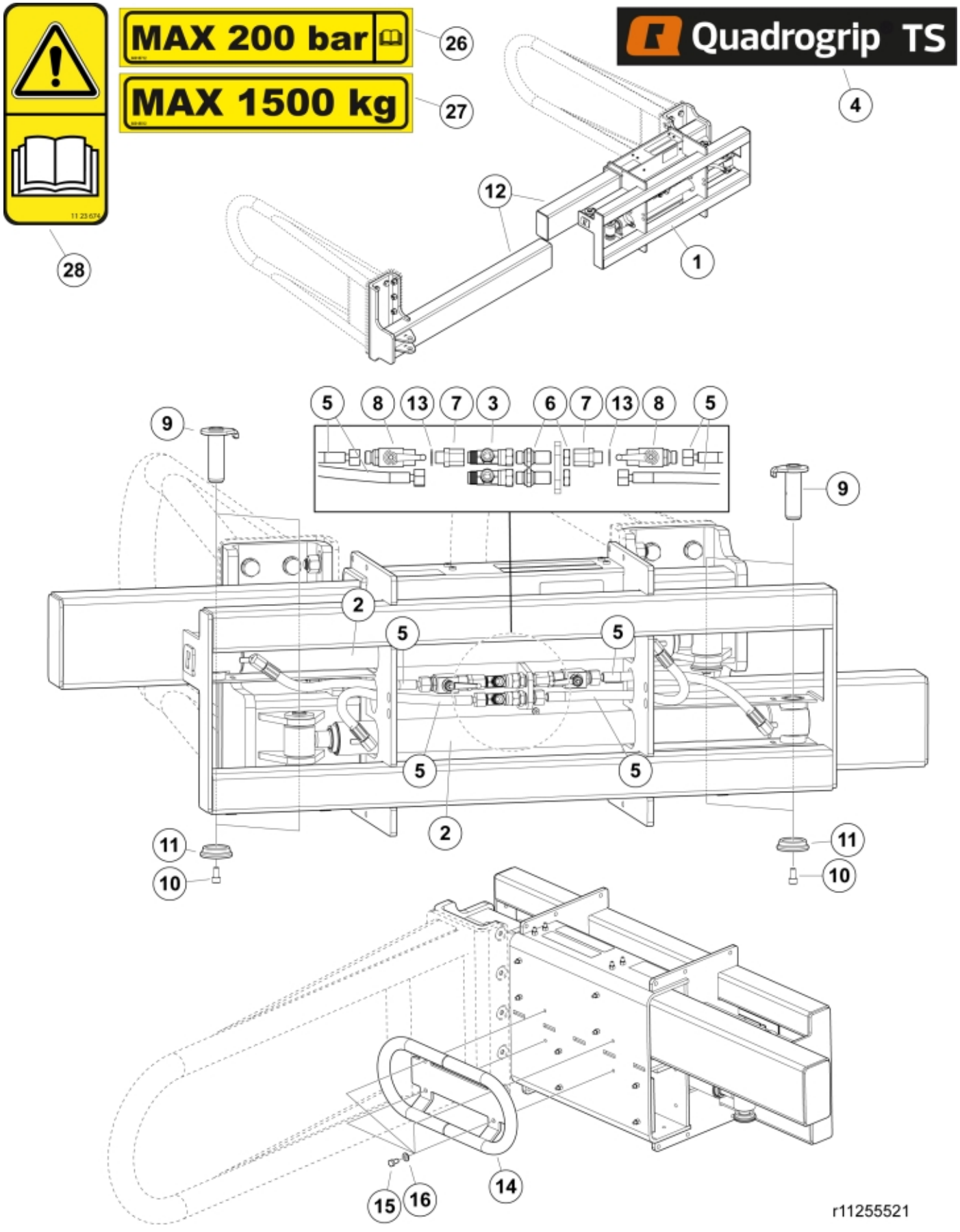

© 2025 Jost

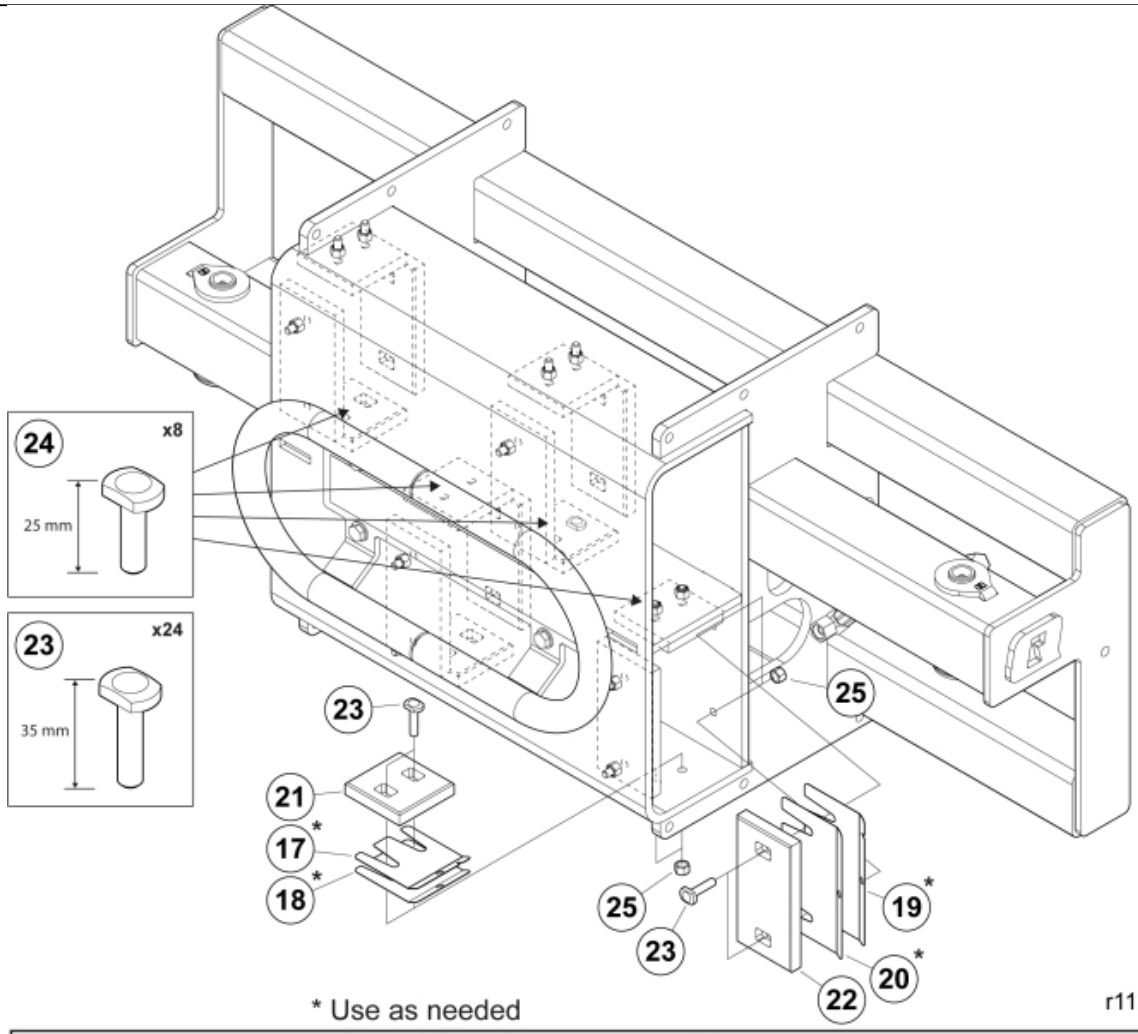

* Use as needed

r11255521_2

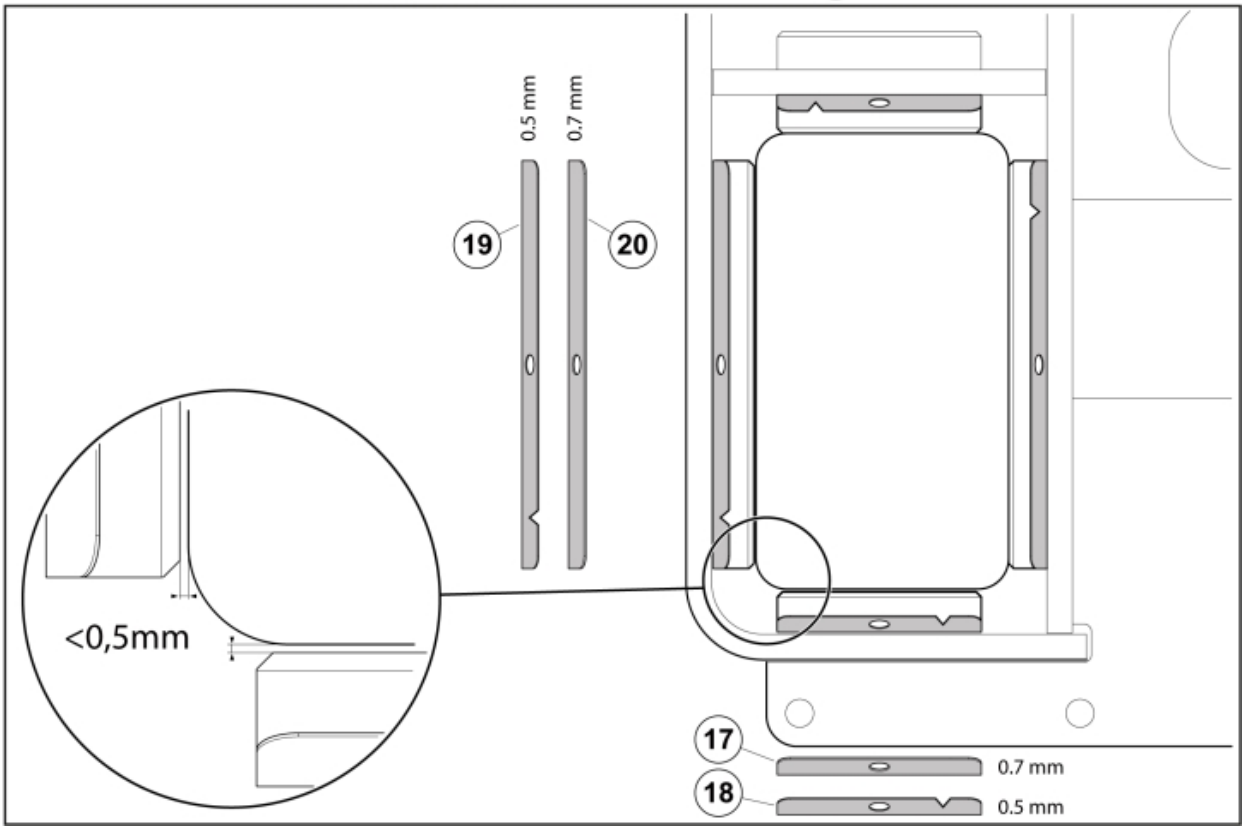

© 2025 Jost

Part assemblies		Quadrogrip TS		
Specification		Year To: 4/8/2026 12:00:00 AM		
PartNo	**Pos**	**Qty**	**Name**	**Specifications**
11255521		1	Quadrogrip TS	4/8/2026 12:00:00 AM
60042617-17	1	1 PCS	Frame	
60110577-1	2	2	Cylinder	4/11/2026 12:00:00 AM
5028031	3	2	T-Adapter	
60044466	4	1 PCS	Decal	"Quadrogrip TS"
60043766	5	4 PCS	Hose	3/8" L=410 3/8G90LMC - 1/2GRLM
11120580	6	2	Adapter cpl.	
5027439	7	2 PCS	Adaptor	G1/2" - G1/2"
5033898	8	2	Shut-off valve	1/2"
60018047	9	4	Pivot Pin	D=30, L=96mm
5050608	10	4	Screw	MC6S M10x20 Loc
5215131	11	4	Locking cover	
60043986	12	2 PCS	Arm	
5013853	13	2	Dowty washer	Tredo 1/2", Part is included in kit 60007907 Hose cpl., 9032177 Hose cpl.
60041728-22	14	1 PCS	Bale support	
5002076	15	4	• Screw	M6S M10 x 20 (8.8)
5013110	16	4	• Washer	BRB 10.5x22x2
60065071		1 PCS	Service kit	
	17	8 PCS	• Spacer plate	80x80x0.7 mm
	18	8 PCS	• Spacer plate	80x80x0.5 mm
	19	8 PCS	• Spacer plate	160x80x0.5 mm
	20	8 PCS	• Spacer plate	160x80x0.7 mm
60066155		1 PCS	Maintenance kit	
	21	8 PCS	• Slide plate	
	22	8 PCS	• Slide plate	
	23	24 PCS	• Screw	M8x35 8.8
	24	8 PCS	• Screw	M8x25 8.8
	25	32	• Nut	M6M M8 Loc-king
60018712	26	1	Warning decal	
60018512	27	1 PCS	Warning decal	Max 1500 kg
1123674	28	1	Warning decal	"Read manual"

© 2025 Jost