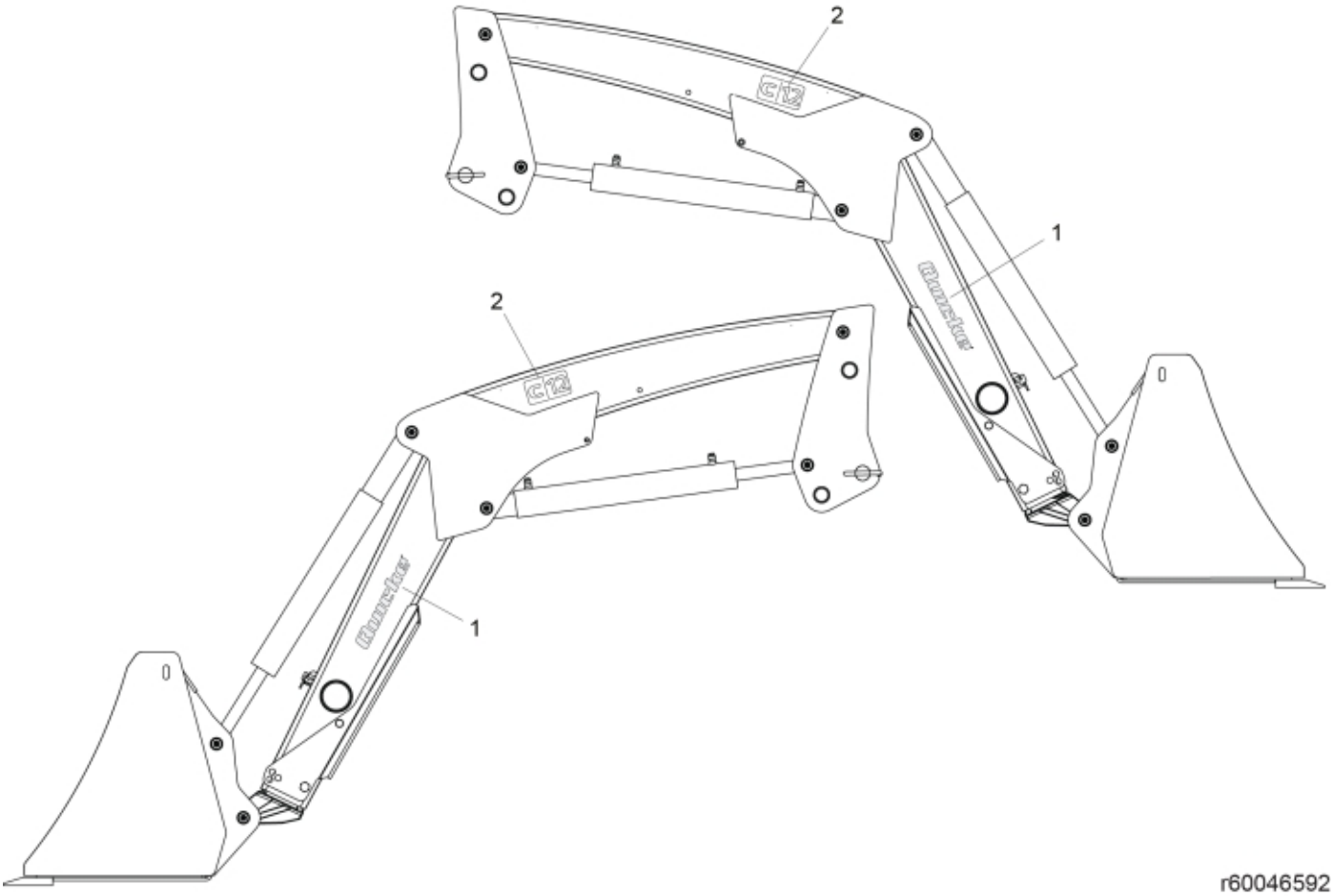

© 2025 Jost

Description	C12
Part assemblies	Decals

PartNo	Pos	Qty	Name	Specifications
60047823	1	2 PCS	Decal, Brand	
60046732	2	2 PCS	Decal, Model	C12

© 2025 Jost