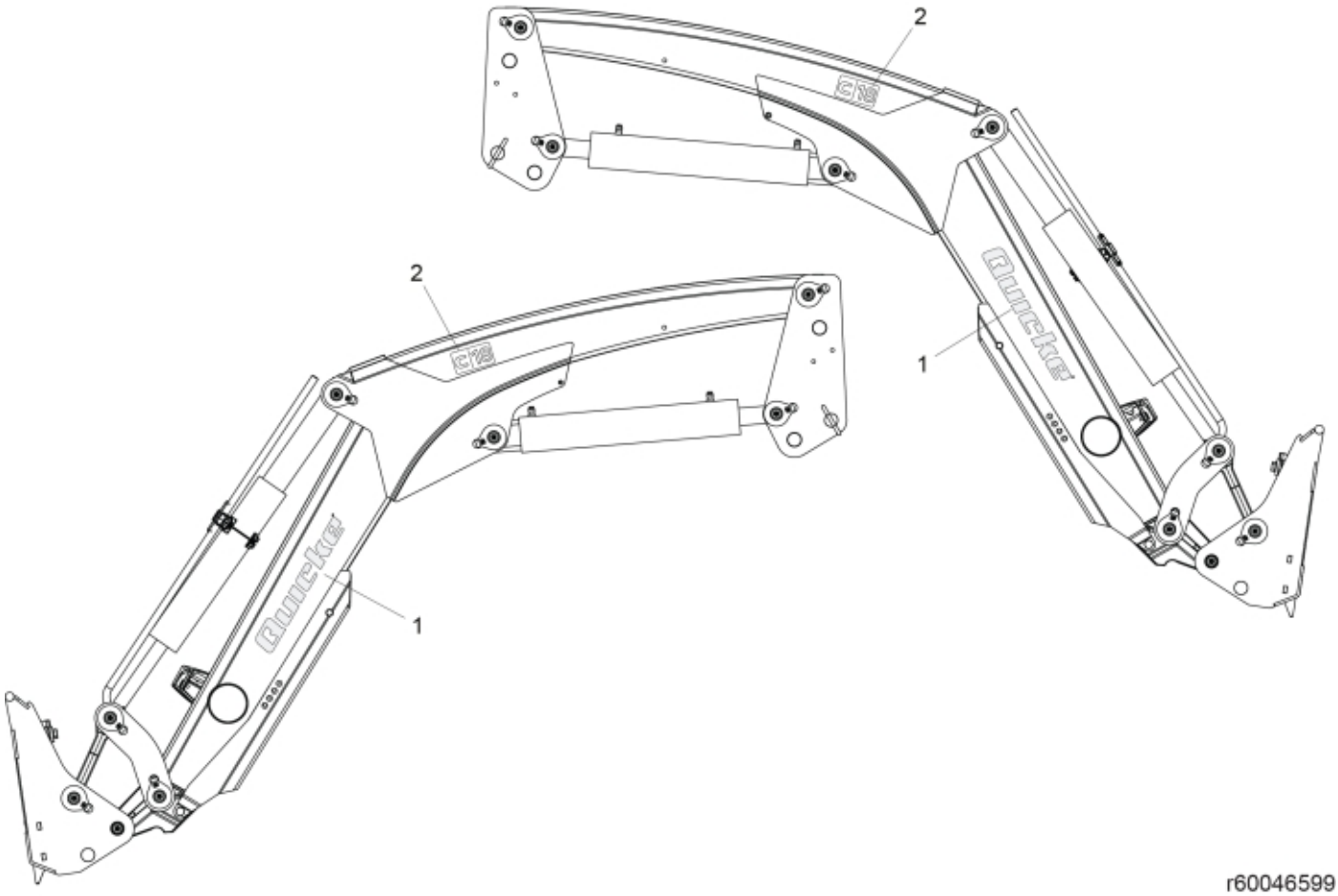



© 2025 Jost

| | |
|---|---|
| **Description** | C18 |
| **Part assemblies** | Decals |

| PartNo | Pos | Qty | Name | Specifications |
|---|---|---|---|---|
| 60028480 | 1 | 2 PCS | Decal, Brand | |
| 60046739 | 2 | 2 PCS | Decal, Model | C18 |


© 2025 Jost