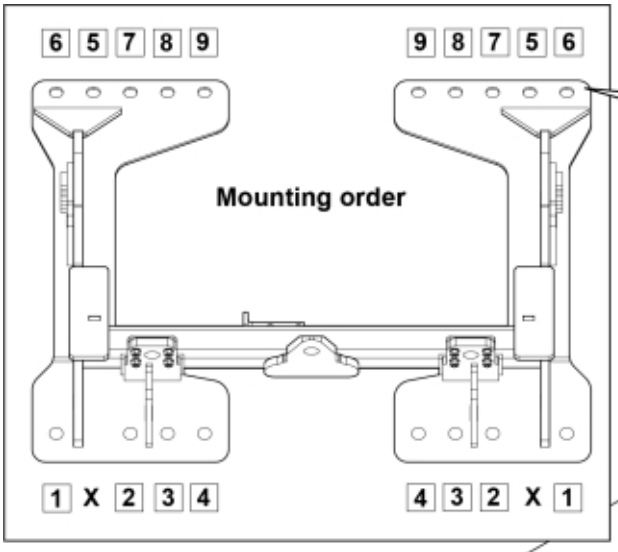

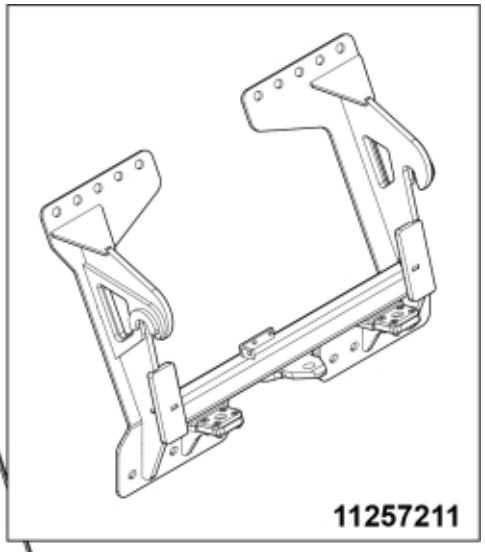

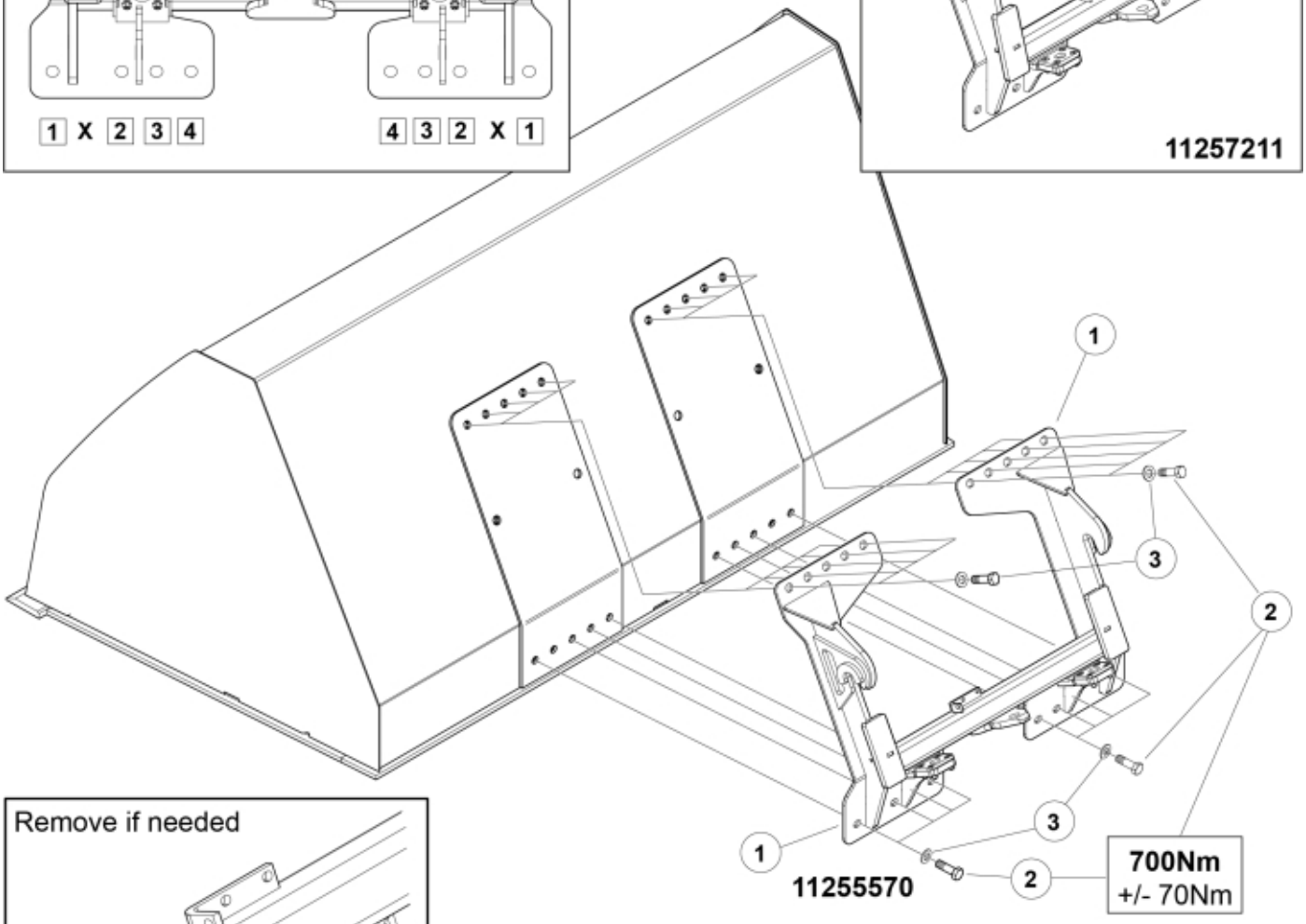

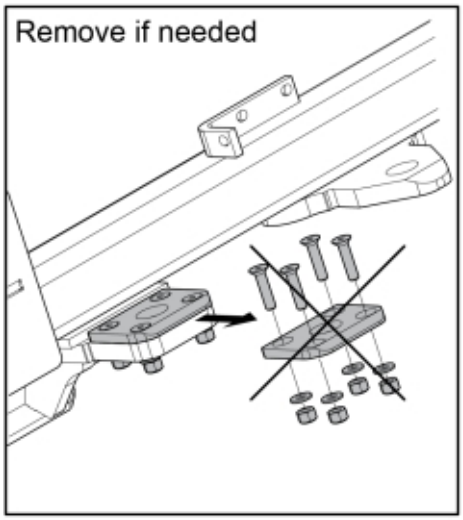

M 11255570_11257211

© 2025 Jost

Part assemblies Attachment kit Merlo ZM2

PartNo	Pos	Qty	Name	Specifications
11255570		1	Attachment kit Merlo ZM2	
60131502	1	1	Attachment kit Merlo ZM2	
60029905		1	Screw kit	
5051392	2	20	• Screw	M6S 24X75 (8.8)
5051393	3	20	• Washer	M24 Broad Wedge-Lock

© 2025 Jost