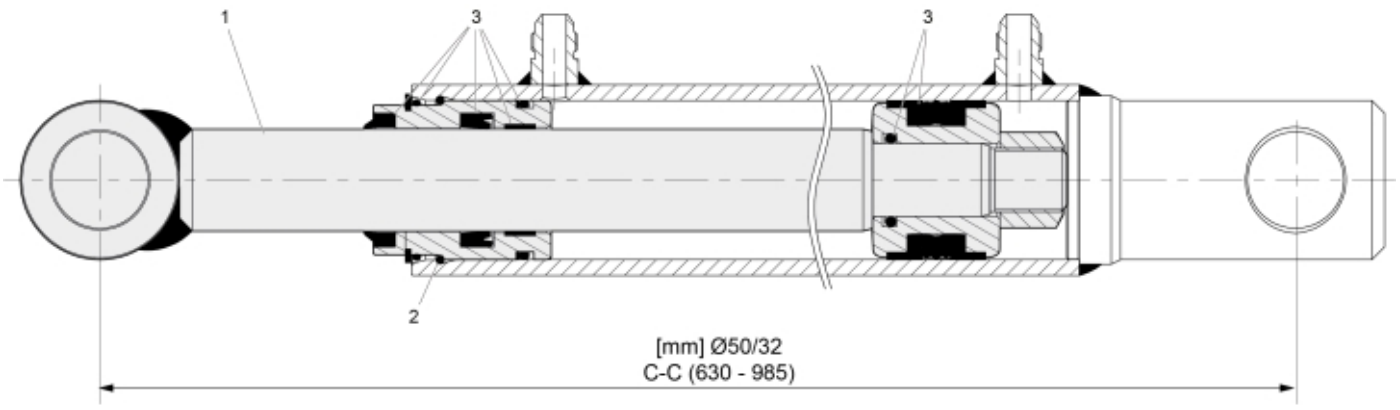

r60028201

© 2025 Jost

Description	50/32
Part assemblies	Lift Cylinder
Specification	Year To: 9/14/2022 12:00:00 AM

PartNo	Pos	Qty	Name	Specifications
60046669	1	1	Piston rod cpl.	
5017004	2	1	• Retaining ring	
60046662	3	1	Seal kit	

© 2025 Jost