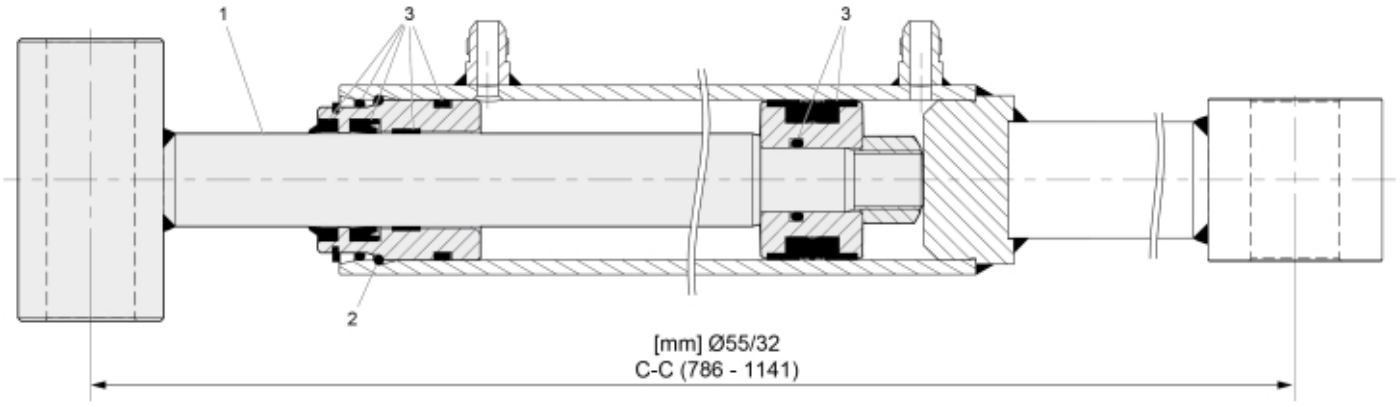

© 2025 Jost

Description	55/32
Part assemblies	Tilt Cylinder
Specification	Year To: 9/14/2022 12:00:00 AM

PartNo	Pos	Qty	Name	Specifications
60046672	1	1	Piston rod cpl.	
5017007	2	1	• Retaining ring	
60046665	3	1	Seal kit	

© 2025 Jost