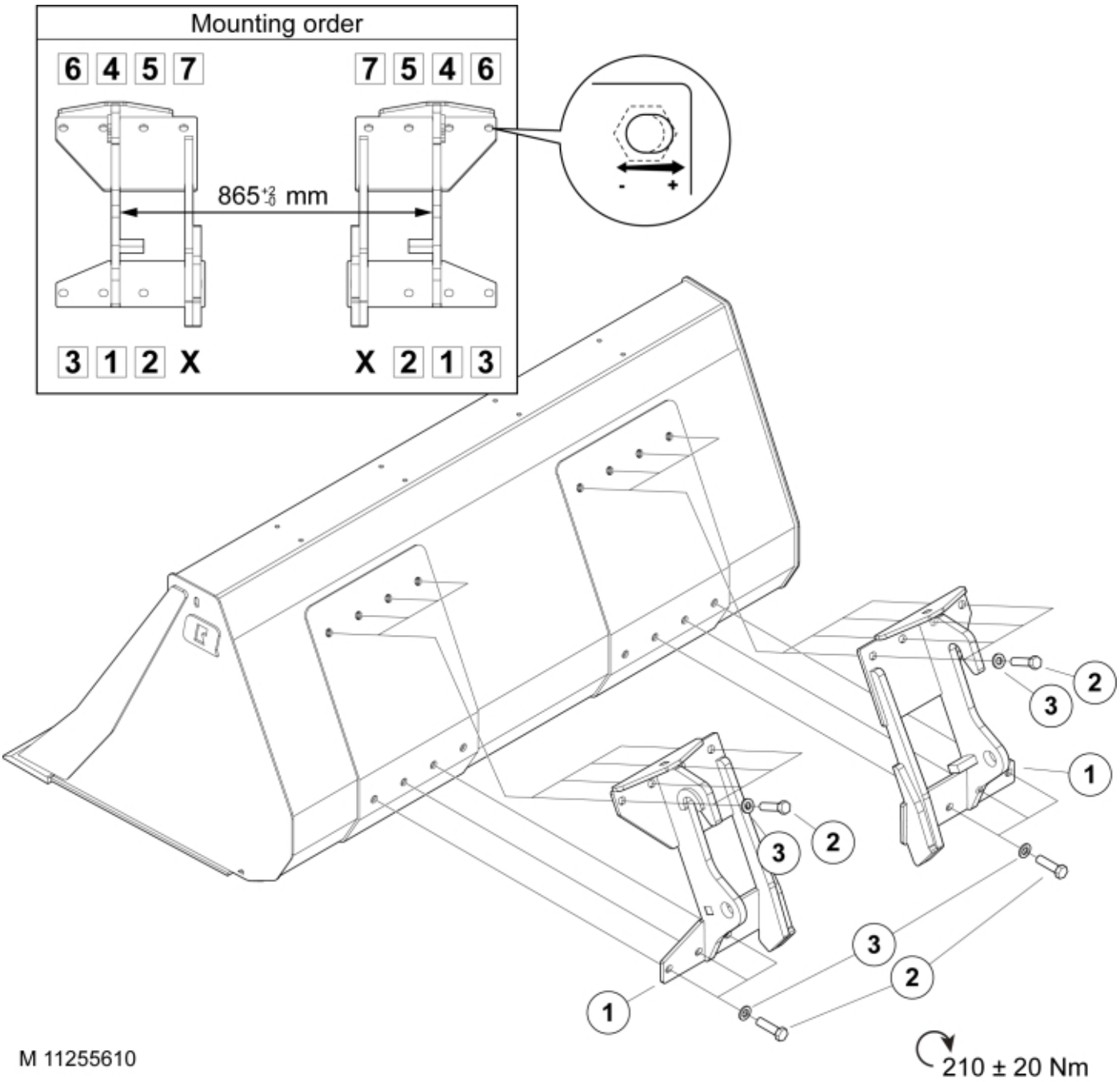
Mounting order
6 4 5 7
7 5 4 6
865 +2 -0 mm
- +
3 1 2 X
X 2 1 3
2
3
1
2
3
1
2
3
M 11255610
210 ± 20 Nm

© 2025 Jost

Part assemblies	Attachment kit Kramer Short

PartNo	Pos	Qty	Name	Specifications
11255610		1	Attachment kit Kramer Short	
60084118	1	1	Attachment Kramer short	
60047988		2	Bolt kit	M16
5002153	2	8	• Screw	M6S M16 x 45
5051493	3	8	• Washer	M16

© 2025 Jost