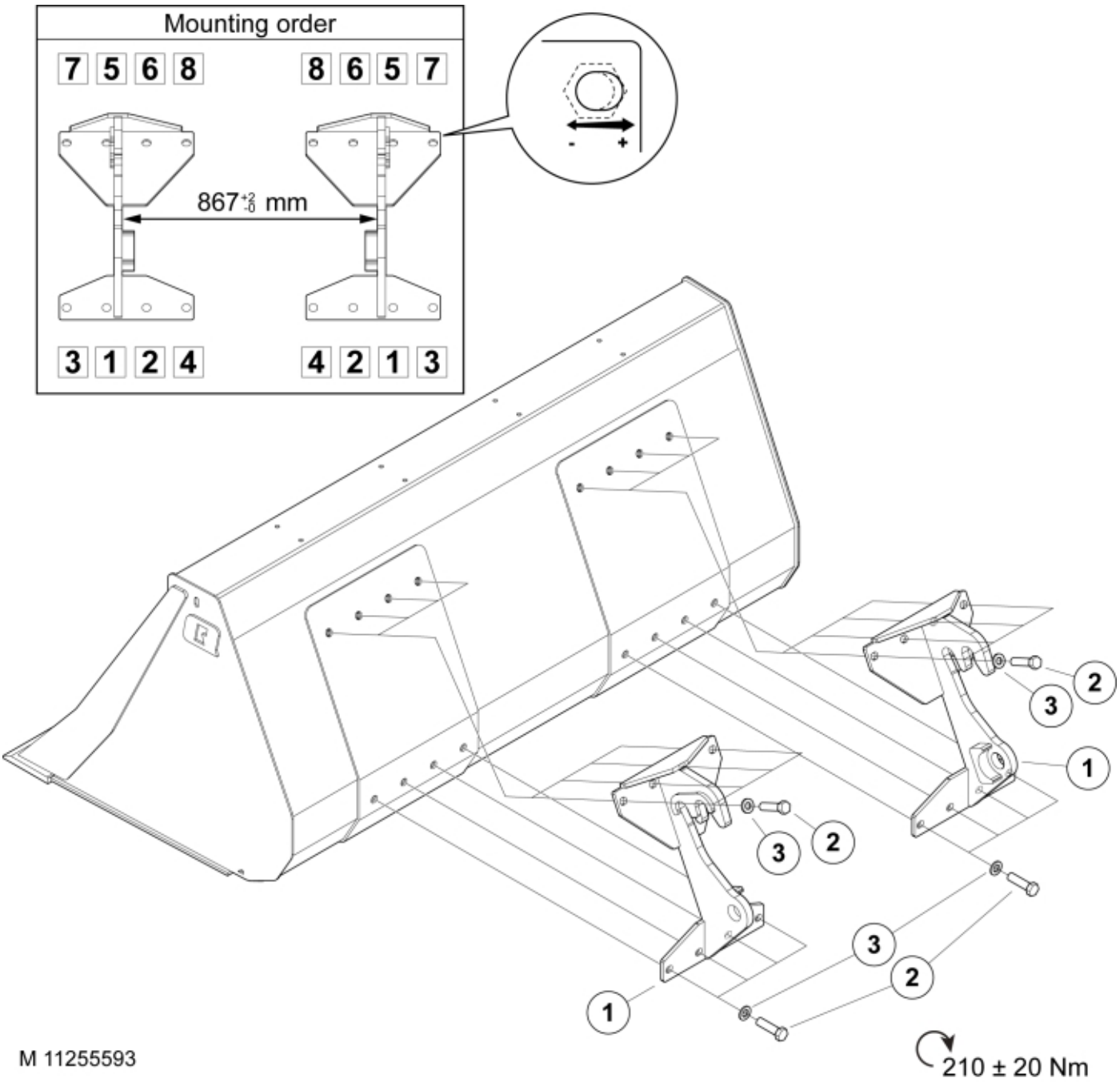
Mounting order
7 5 6 8
8 6 5 7
867 mm
3 1 2 4
4 2 1 3
- +
1
2
3
M 11255593
210 ± 20 Nm

© 2025 Jost

Part assemblies Attachment kit Schäffer type KR

PartNo	Pos	Qty	Name	Specifications
11255593		1	Attachment kit Schäffer type KR	
60074272	1	1	Attachment Schäffer KR	
60047988		2	Bolt kit	M16
5002153	2	8	• Screw	M6S M16 x 45
5051493	3	8	• Washer	M16

© 2025 Jost