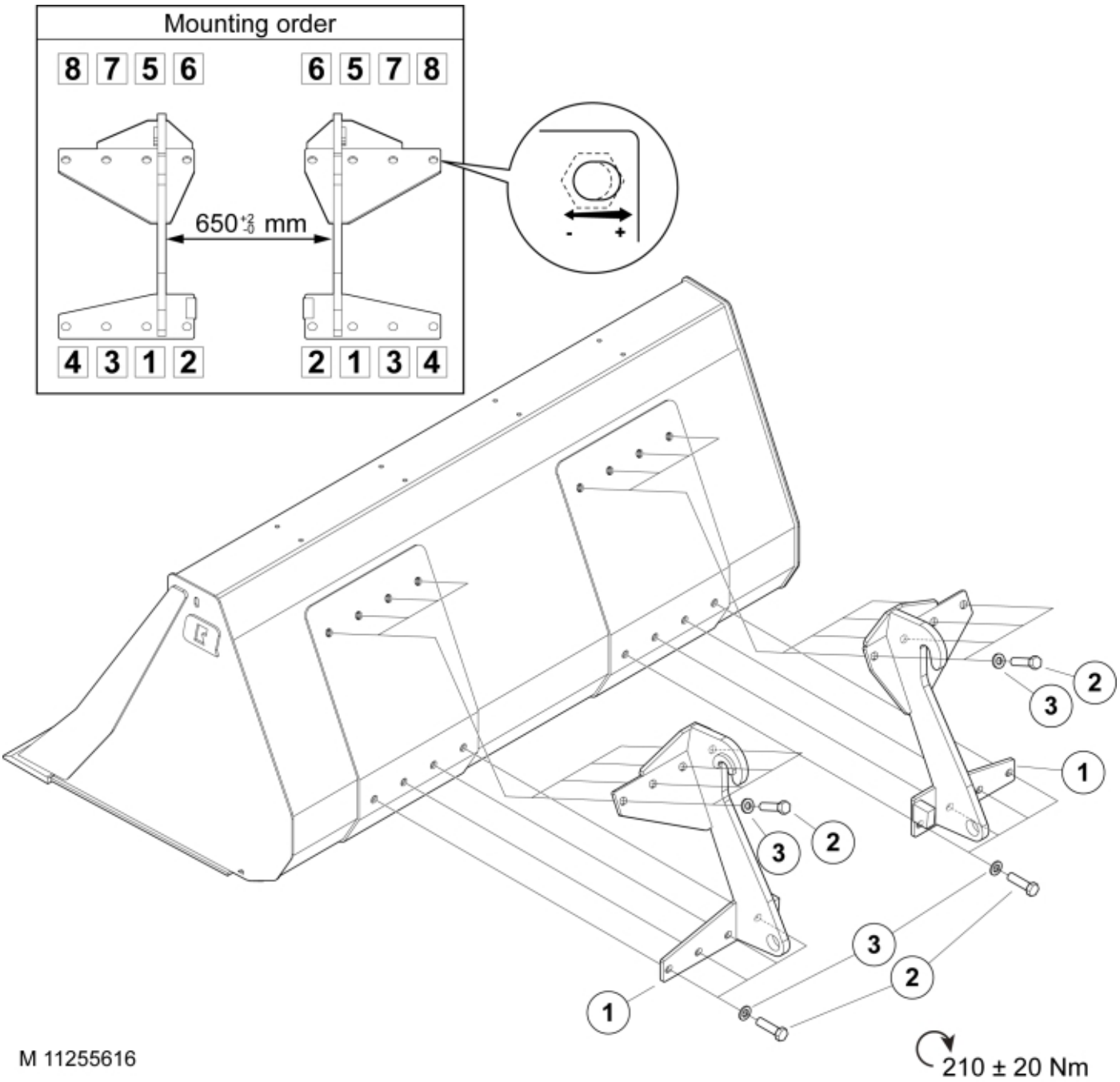
Mounting order
8 7 5 6
6 5 7 8
650 +2 -0 mm
- +
4 3 1 2
2 1 3 4
2
3
1
2
3
1
3
2
1
M 11255616
210 ± 20 Nm

© 2025 Jost

Part assemblies Attachment kit Zettelmeyer 402

PartNo	Pos	Qty	Name	Specifications
11255616		1	Attachment kit Zettelmeyer 402	
60048784	1	1 PCS	Attachment Zettelmeyer 402	
60047988		2	Bolt kit	M16
5002153	2	8	• Screw	M6S M16 x 45
5051493	3	8	• Washer	M16

© 2025 Jost