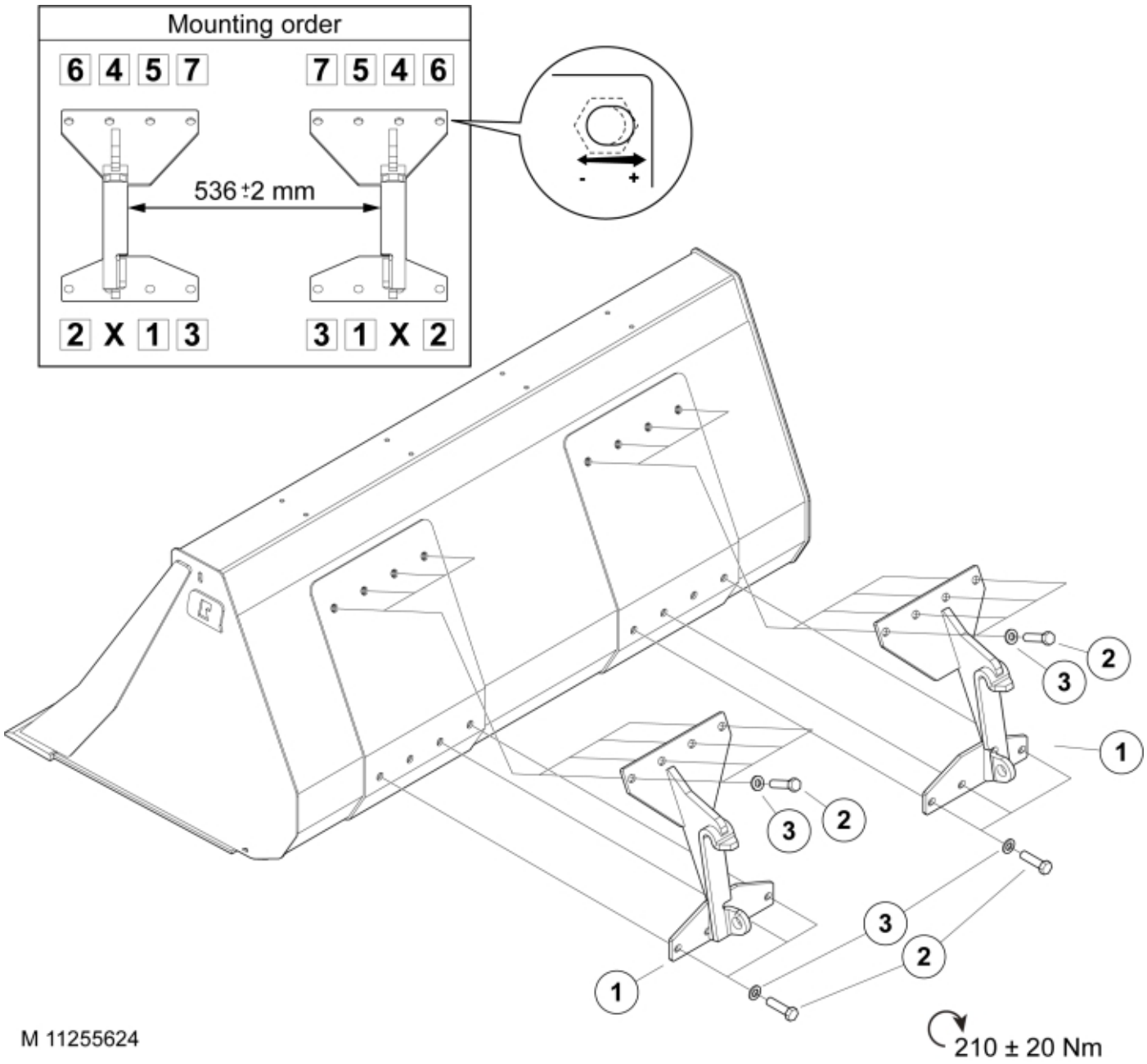
Mounting order
6 4 5 7
7 5 4 6
536 ±2 mm
- +
2 X 1 3
3 1 X 2
1
2
3
210 ± 20 Nm
M 11255624

© 2025 Jost

Part assemblies Attachment kit Alo type3

PartNo	Pos	Qty	Name	Specifications
11255624		1	Attachment kit Alo type3	
60049008	1	1 PCS	Attachment Alo type3	
60047988		2	Bolt kit	M16
5002153	2	8	• Screw	M6S M16 x 45
5051493	3	8	• Washer	M16

© 2025 Jost