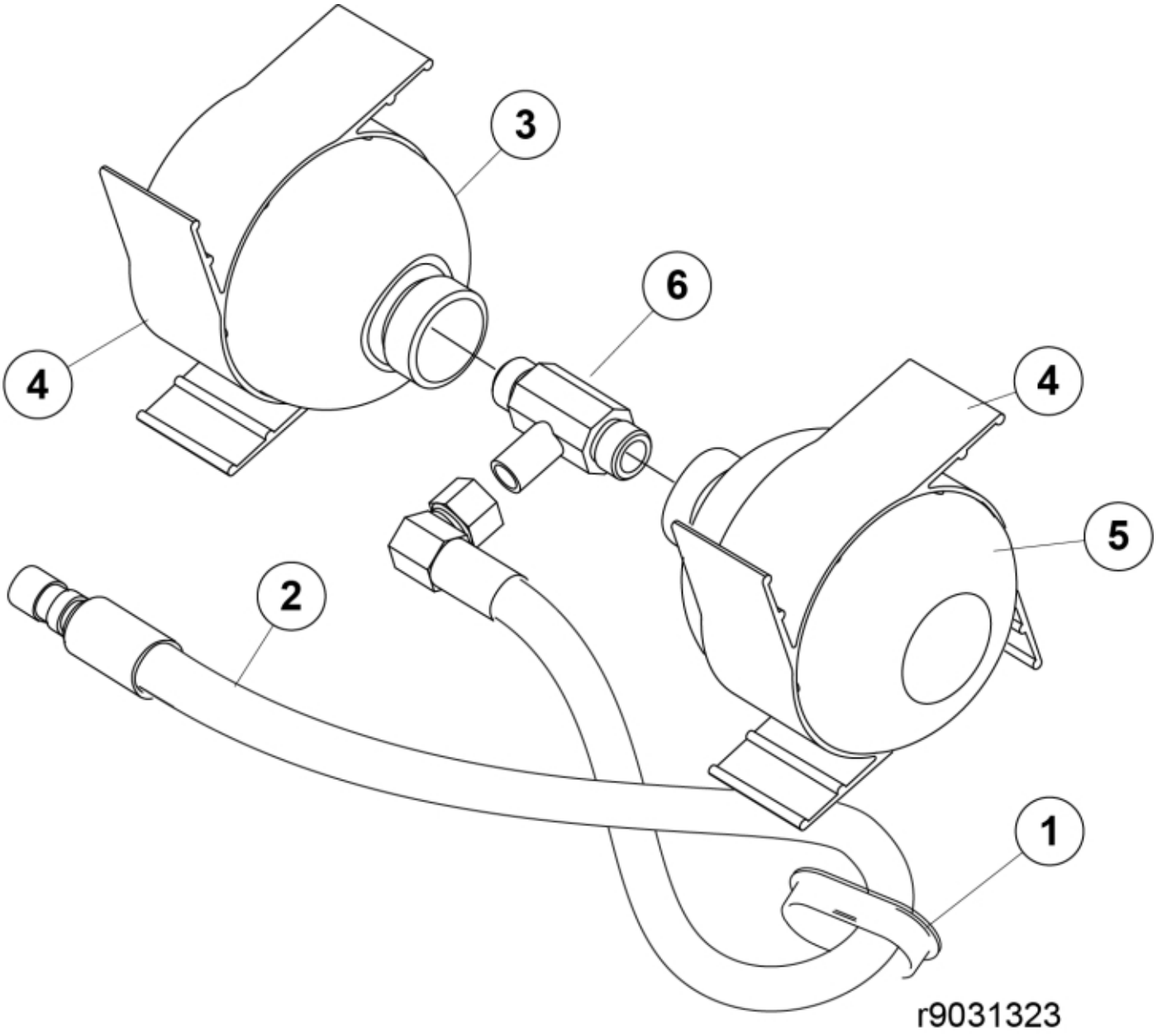

© 2025 Jost

Part assemblies SoftDrive

PartNo	Pos	Qty	Name	Specifications
5215111	1	1	Edge cover	
9031147	2	1	Hose	3/8" L=800mm
5034102	3	1	Accumulator	
60111511	4	2	Bracket	
5033773	5	1	Accumulator	0,5L/22Bar
11120516	6	1	T-Adapter	

© 2025 Jost