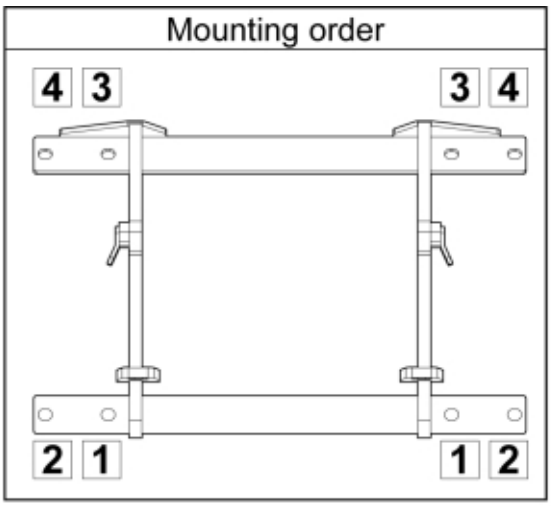

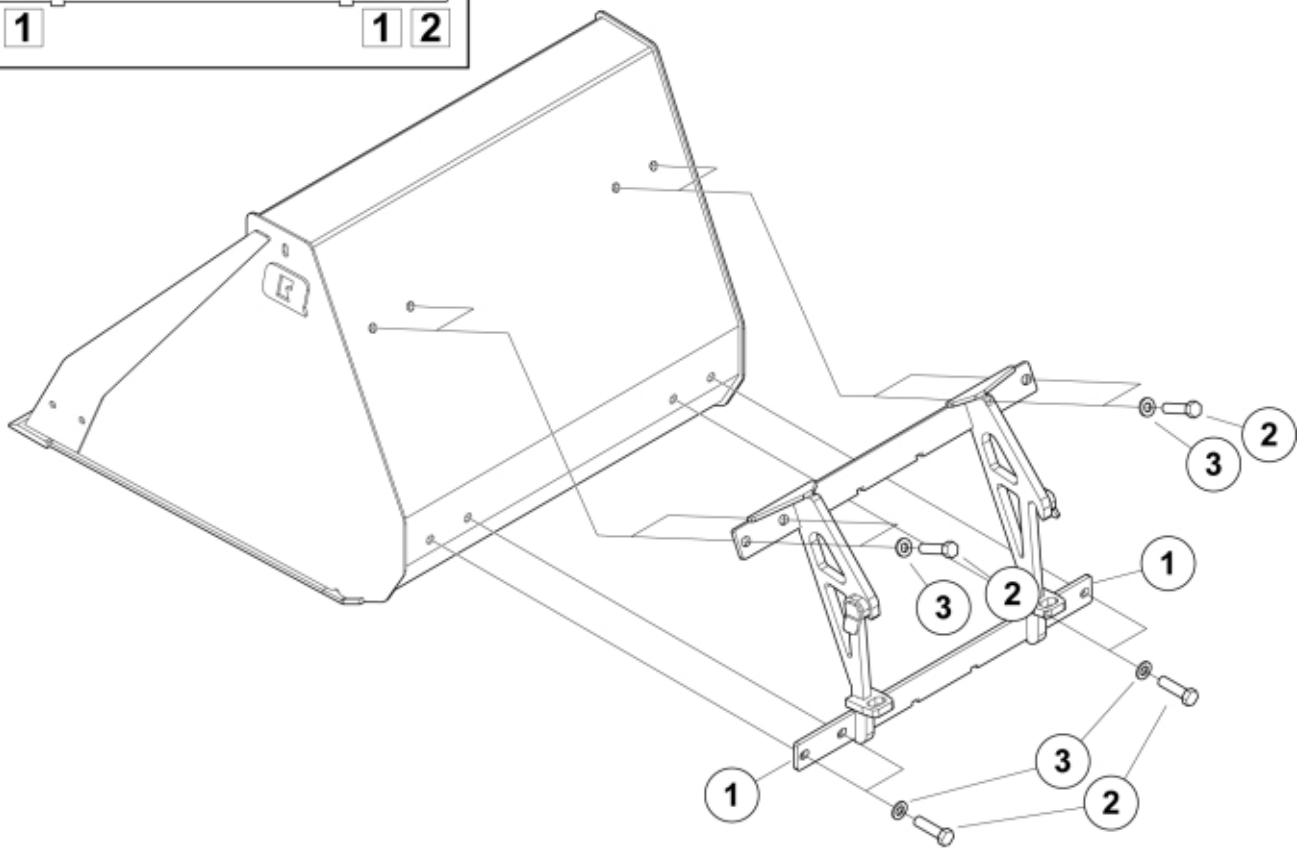

M 11255578

210 ± 20 Nm

© 2025 Jost

Part assemblies Attachment kit Avant

PartNo	Pos	Qty	Name	Specifications
11255578		1	Attachment kit Avant	
60072062	1	1 PCS	Attachment Avant	
60047988		1	Bolt kit	M16
5002153	2	8	• Screw	M6S M16 x 45
5051493	3	8	• Washer	M16

© 2025 Jost