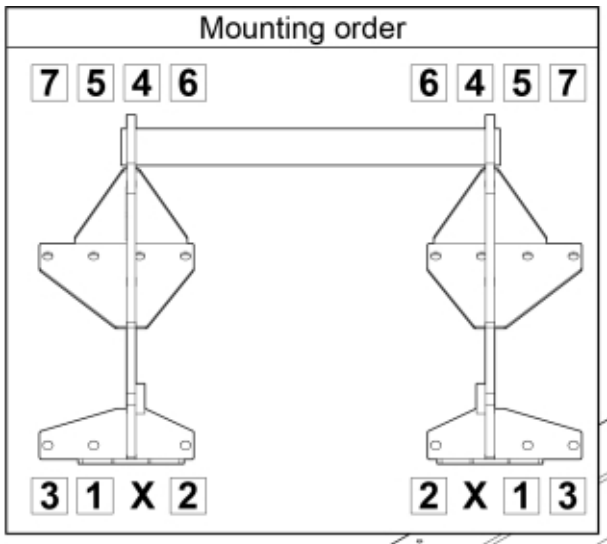

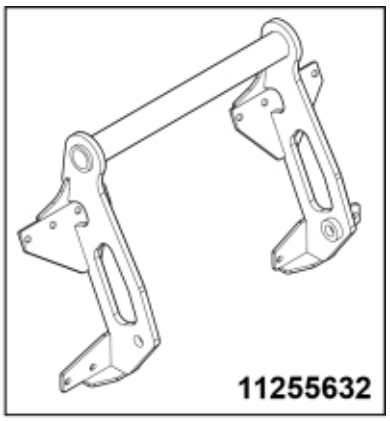

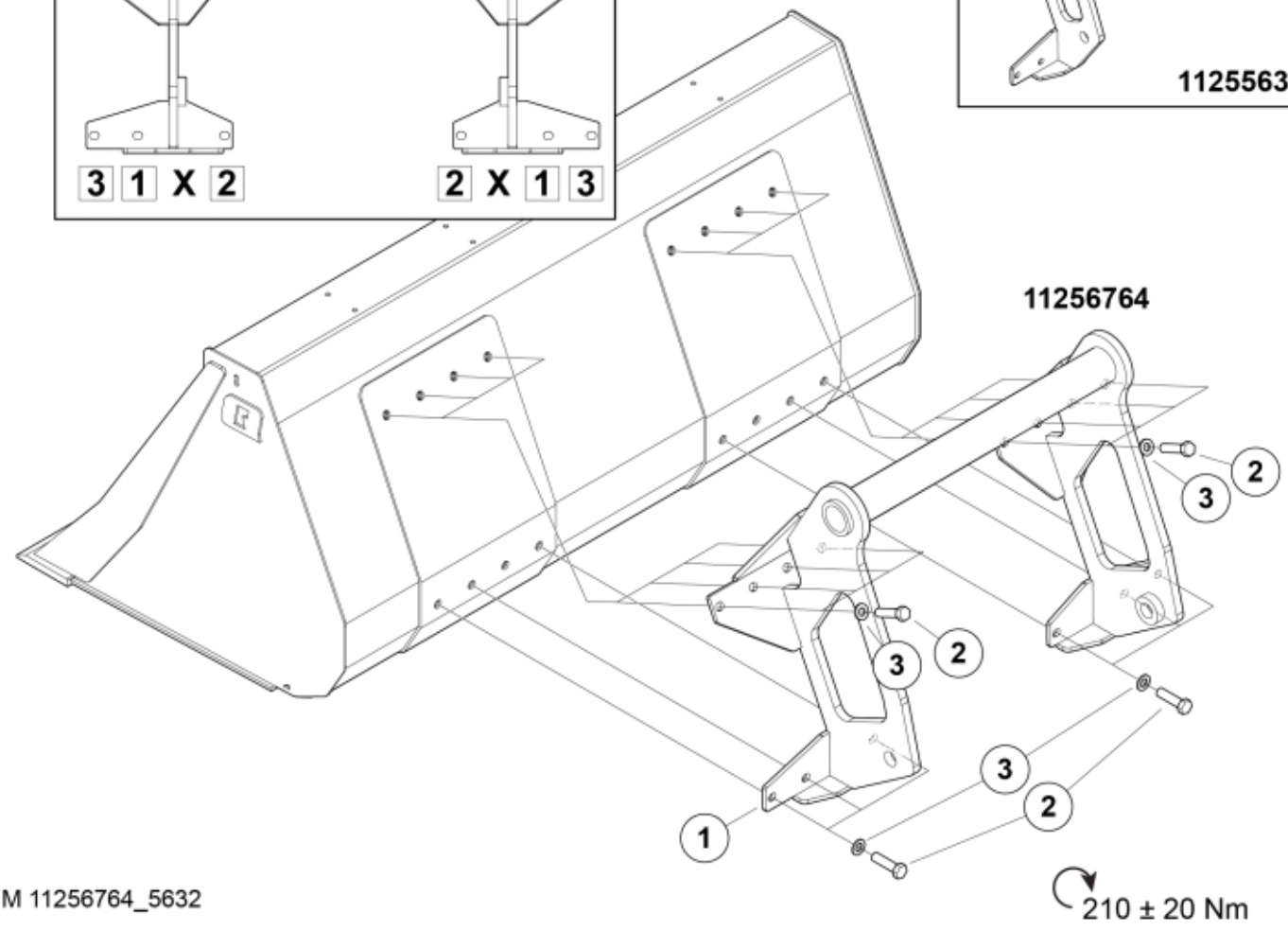

M 11256764_5632

© 2025 Jost

Part assemblies Attachment kit Bobcat FDI MF

PartNo	Pos	Qty	Name	Specifications
60114454	1	1	Attachment Bobcat FDI MF	
60047988		2	Bolt kit	M16
5002153	2	8	• Screw	M6S M16 x 45
5051493	3	8	• Washer	M16

© 2025 Jost