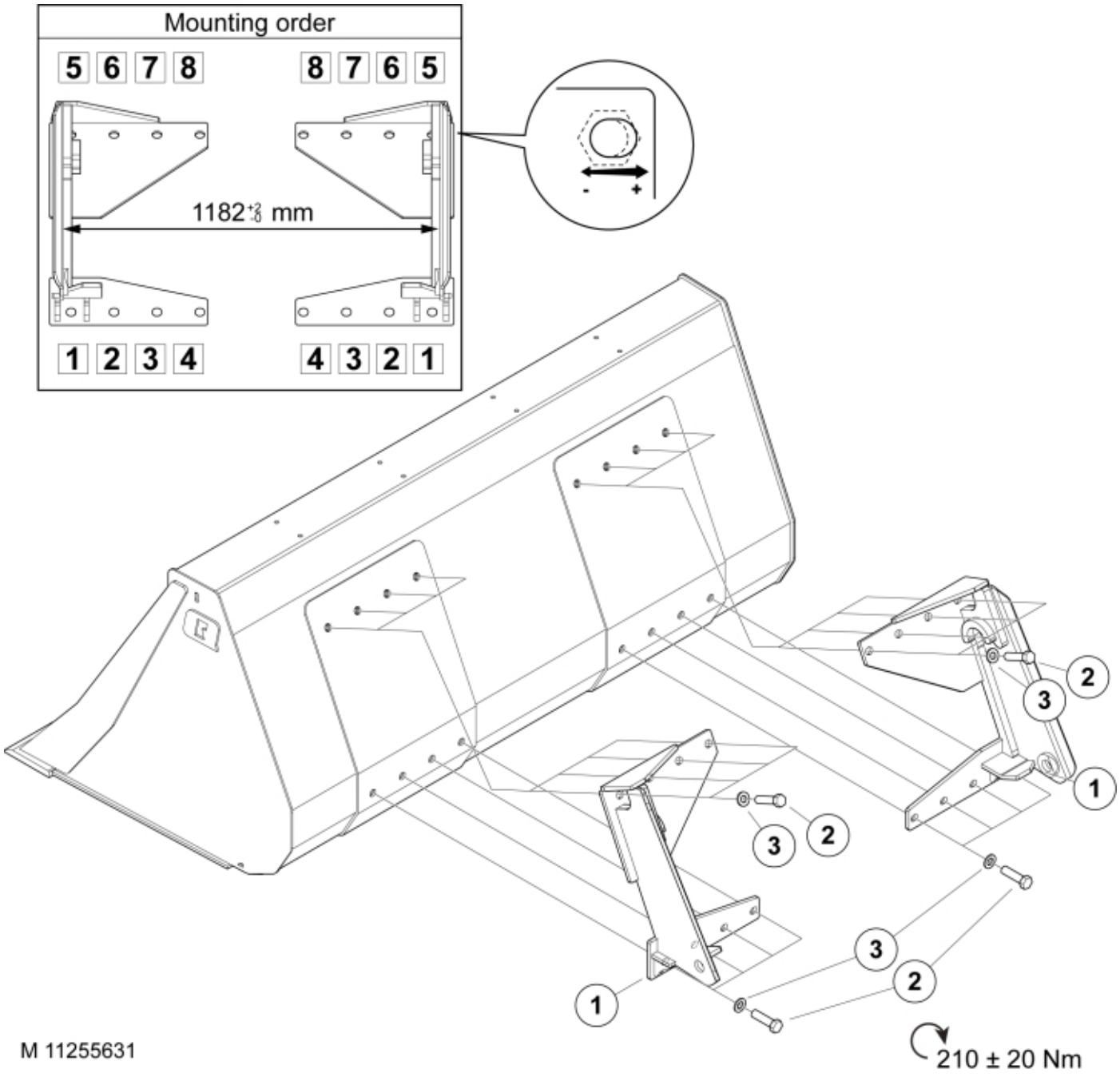
Mounting order
5 6 7 8
8 7 6 5
1182 +3 -8 mm
1 2 3 4
4 3 2 1
- +
2
3
1
3
2
3
2
1
M 11255631
210 ± 20 Nm

© 2025 Jost

Part assemblies Attachment kit Hauer

PartNo	Pos	Qty	Name	Specifications
11255631		1	Attachment kit Hauer	
60049258	1	1 PCS	Attachment Hauer	
60047988		2	Bolt kit	M16
5002153	2	8	• Screw	M6S M16 x 45
5051493	3	8	• Washer	M16

© 2025 Jost