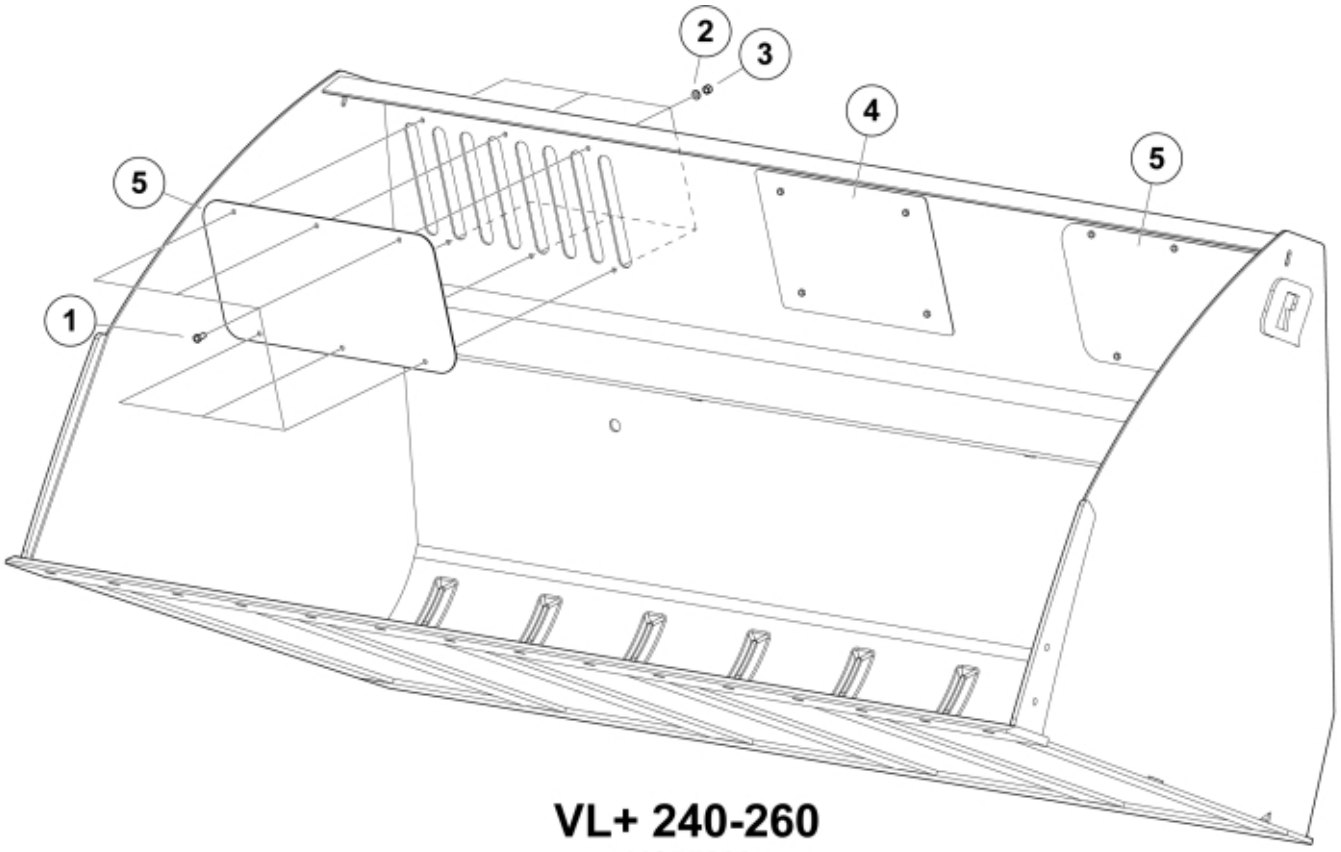

VL+ 240-260
11255609

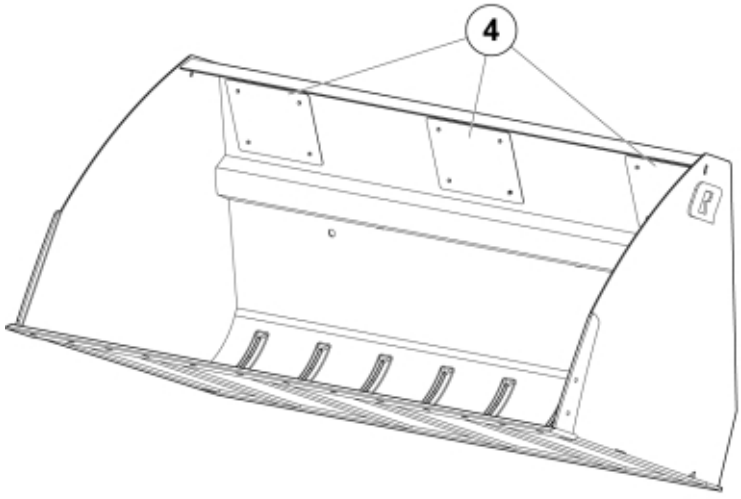

VL+ 200-220
11255608

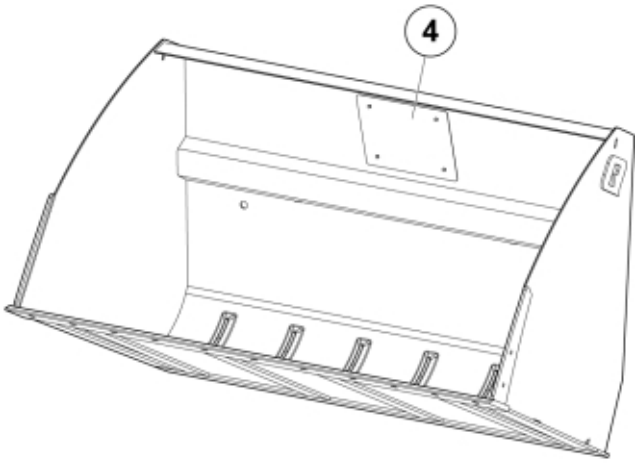

VL+ 180
11255606

© 2025 Jost

Description	180
Part assemblies	Cover kit

PartNo	Pos	Qty	Name	Specifications
11255606		1	Cover kit	
5003008	1	4 PCS	Screw	M6x20
5013108	2	4	Washer	BRB 6,4 x 12 x 1,5
20708137	3	4	Nut	M6 FZB, 708137
60048603-22	4	1 PCS	Cover plate	

© 2025 Jost