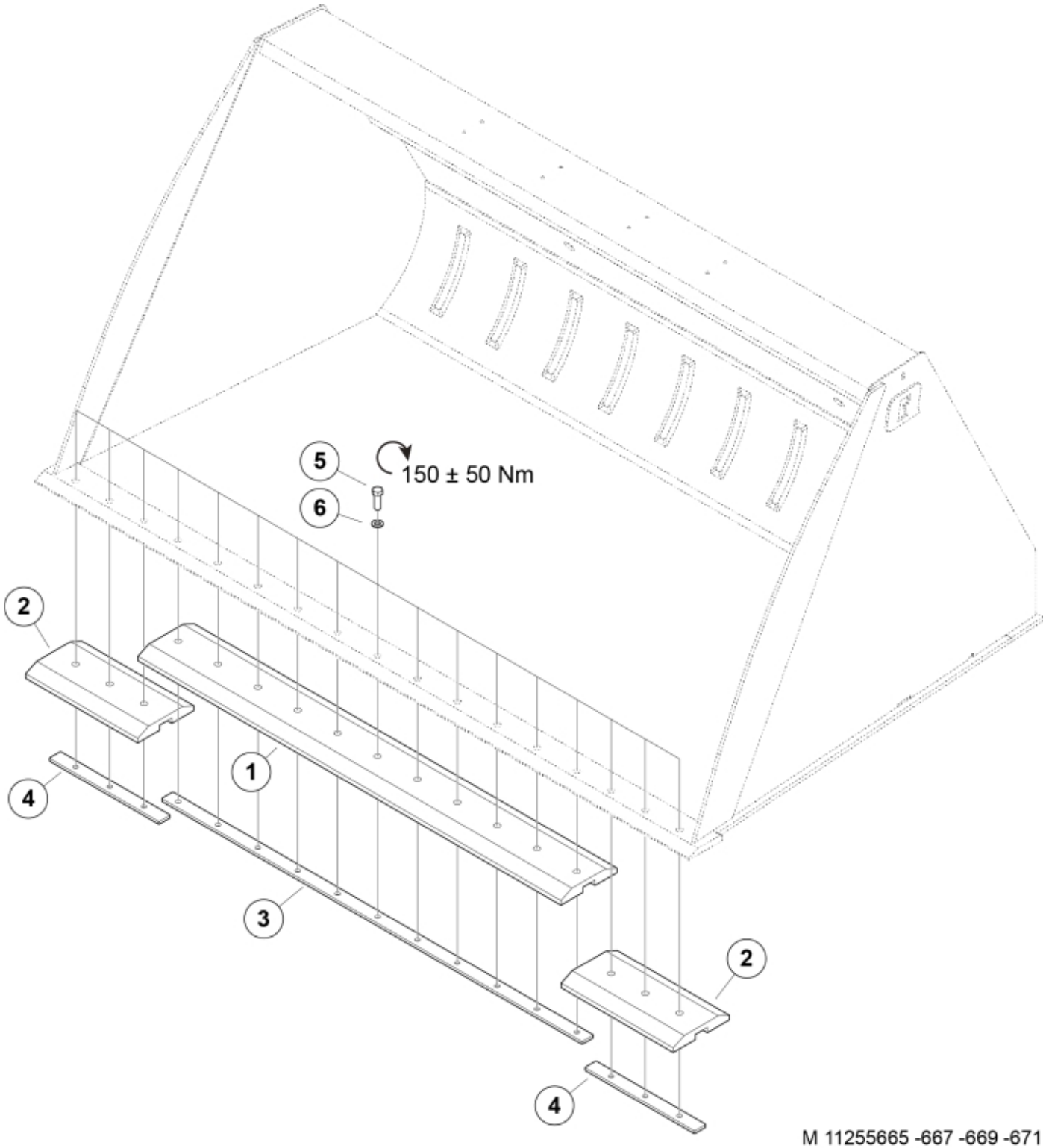

M 11255665 -667 -669 -671

© 2025 Jost

Description	305
Part assemblies	Plastic cutting edge kit 305
Specification	Year To: 5/1/2026 12:00:00 AM

PartNo	Pos	Qty	Name	Specifications
11255671		1	Plastic cutting edge kit 305	5/1/2026 12:00:00 AM
60050274	1	1 PCS	Bolt-on cutting edge	
60050251	2	2 PCS	Bolt-on cutting edge	
60050275	3	1 PCS	Plate	
60050235	4	2 PCS	Plate	
		1	Bolt kit	
5002215	5	20	• Screw	M6S M20 x 60 (10,9)
5013127	6	20	• Washer	BRB 21 x 36 x 3, Part is included in kit 11255096 Attachment kit Merlo

© 2025 Jost