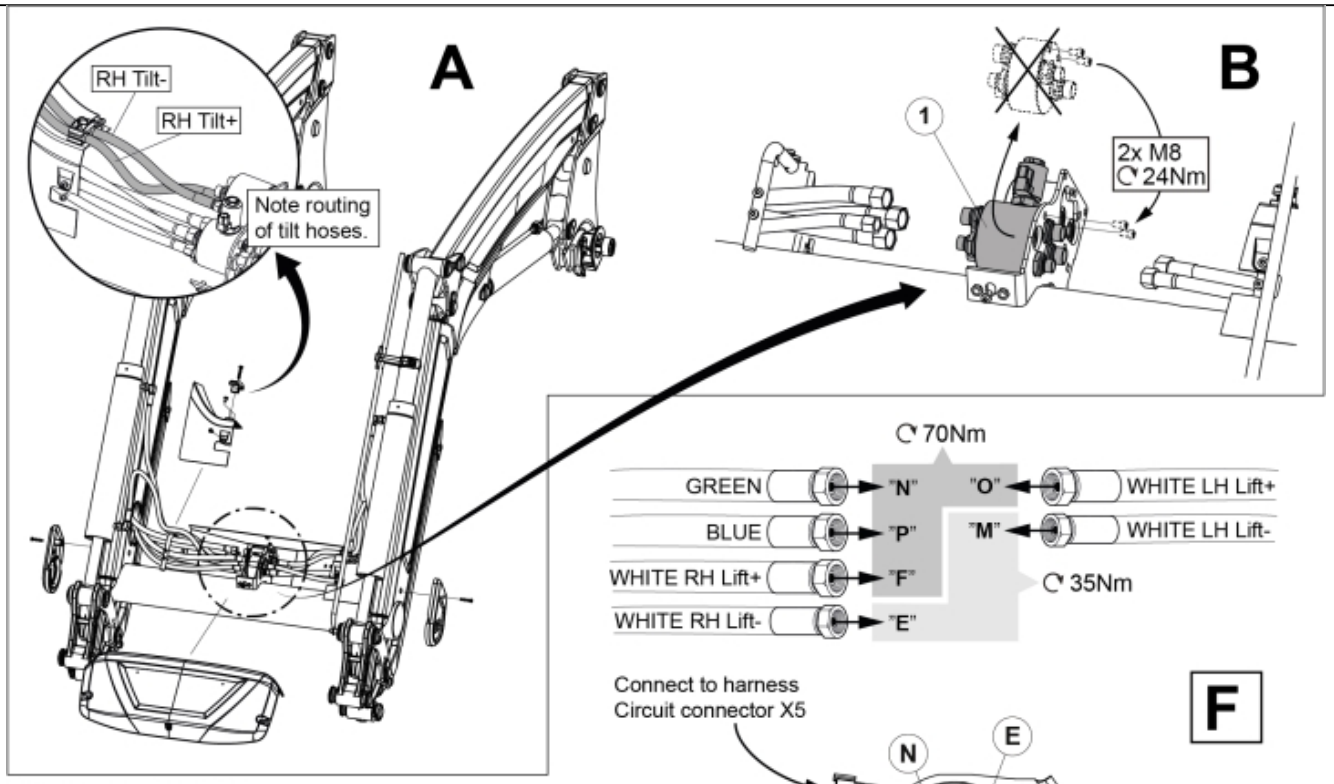

M 60050229_230_231

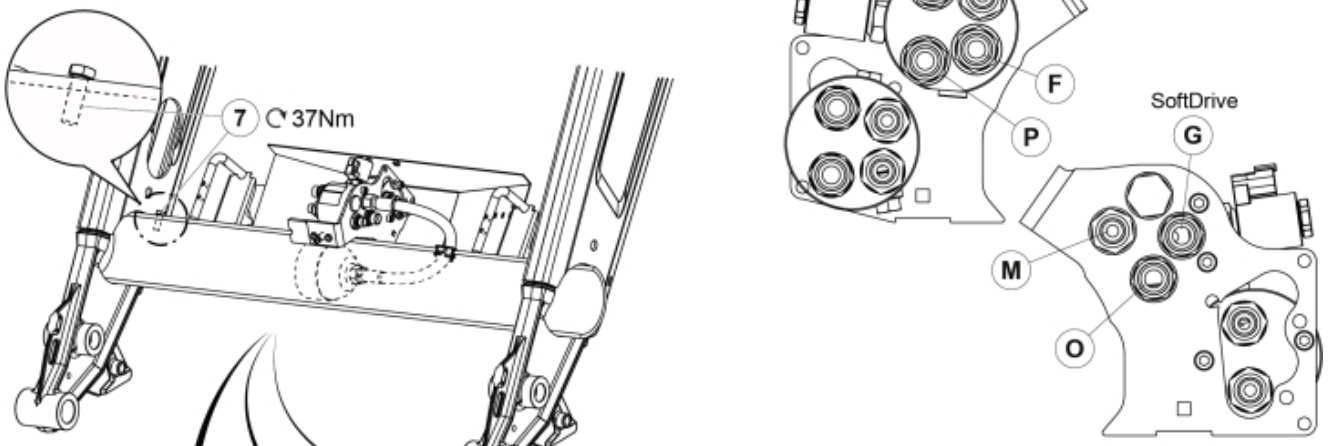

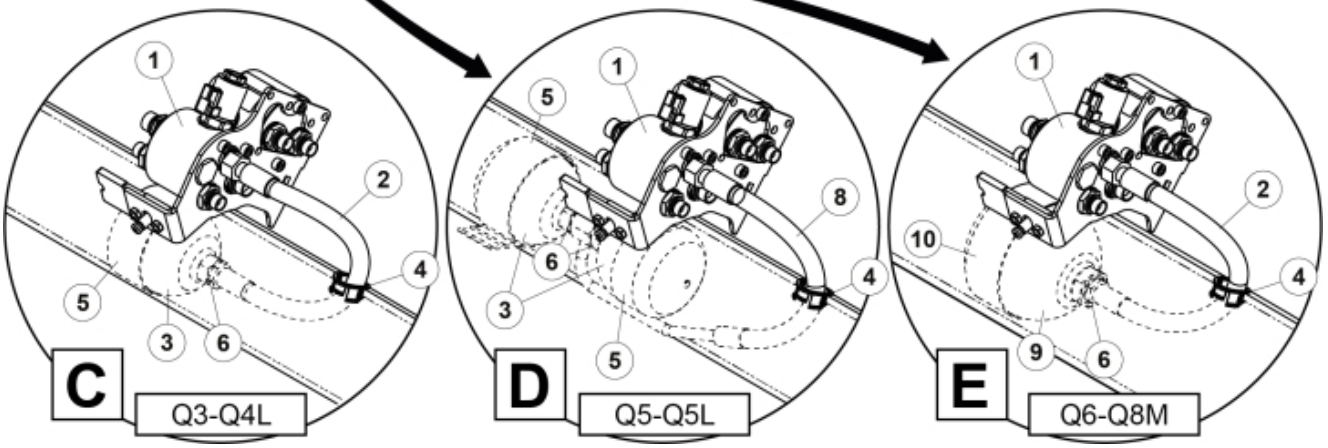

© 2025 Jost

Part assemblies	SoftDrive kit Plus
Specification	Specification: S/N 101200900546 -

PartNo	Pos	Qty	Name	Specifications
4501145	1	1	Block cpl	Lift, Replaces 4500131, 5/1/2019 12:00:00 AM
5033773	3	2	Accumulator	0,5L/22Bar
60008713	4	1	Edge cover	
60096821	5	1	Bracket	
5013853	6	2	Dowty washer	Tredo 1/2", Part is included in kit 60007907 Hose cpl., 9032177 Hose cpl.
5002077	7	1	Screw	M6S 10x30
60041650	8	1	Hose	

© 2025 Jost