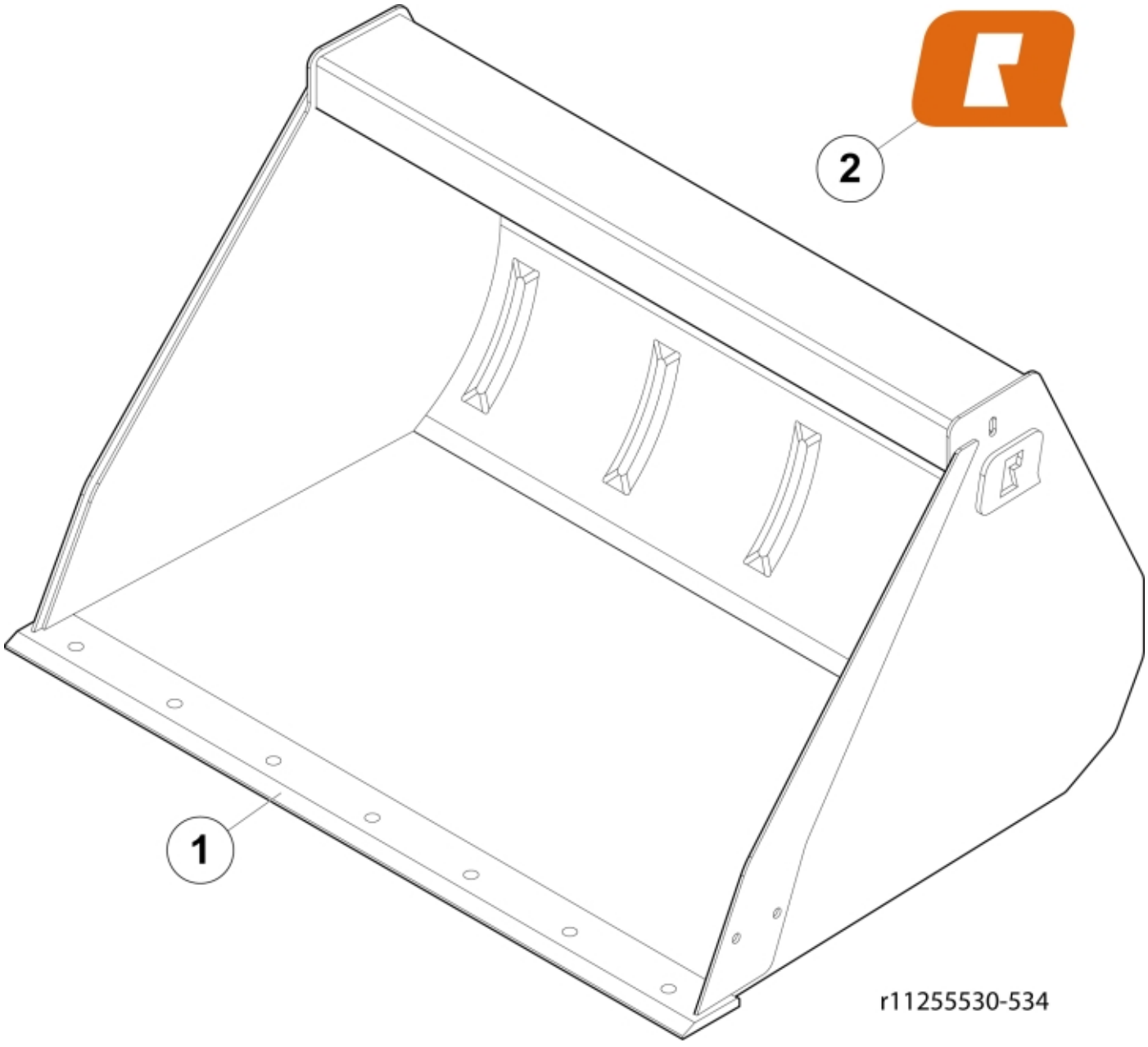

© 2025 Jost

Part assemblies	Bucket GS+ 90
Specification	Year From: 3/1/2020 12:00:00 AM

PartNo	Pos	Qty	Name	Specifications
11255530		1	Bucket GS+ 90	3/1/2020 12:00:00 AM
60046400	1	1	Cutting edge	90
60056616	2	2	Decal	"Q" medium 110mm
5022119		2	Plug	

© 2025 Jost