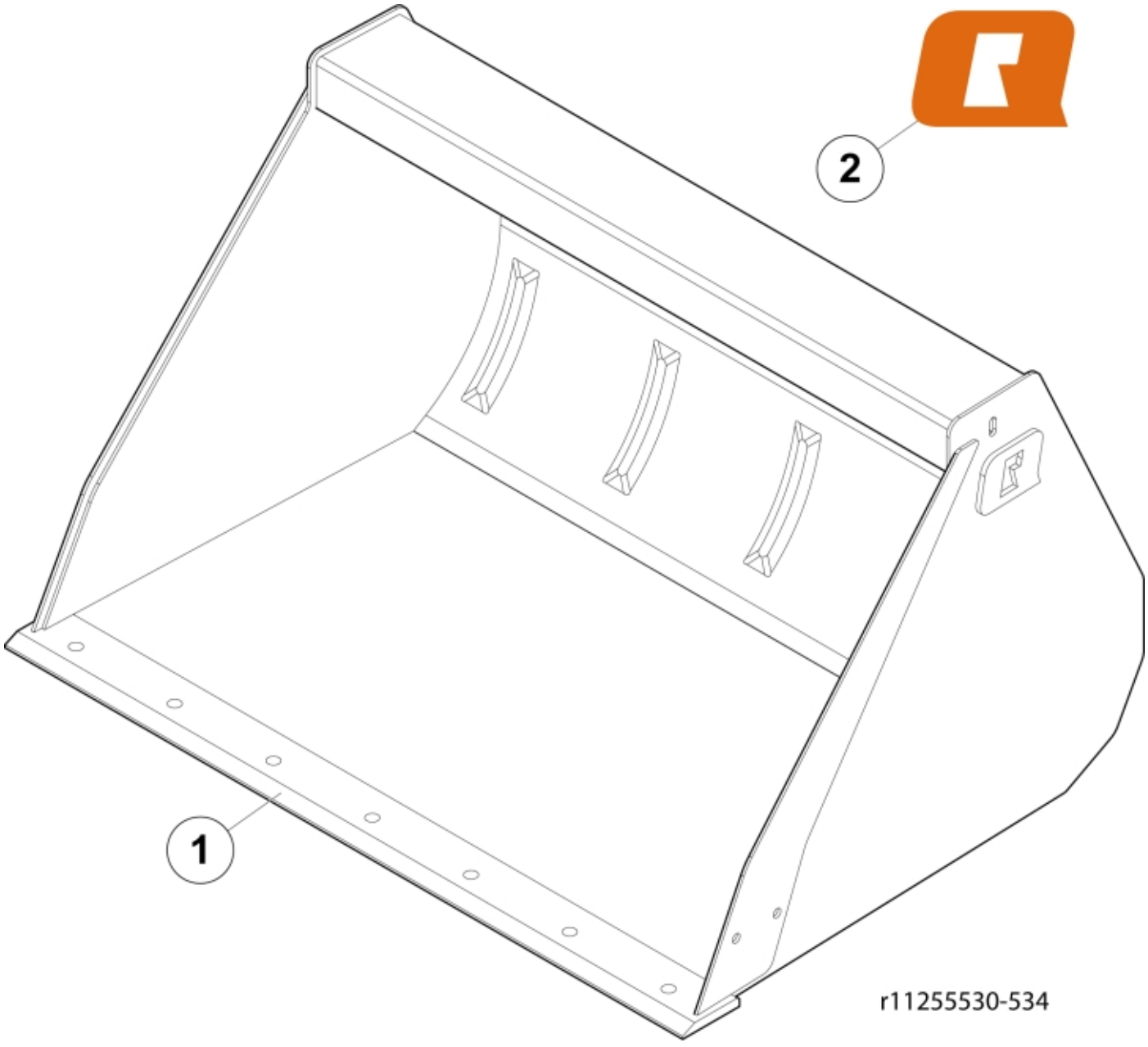

© 2025 Jost

Part assemblies	Bucket GS+ 100
Specification	Year From: 3/1/2020 12:00:00 AM

PartNo	Pos	Qty	Name	Specifications
11255531		1	Bucket GS+ 100	3/1/2020 12:00:00 AM
60046609	1	1	Cutting edge	100
60056616	2	2	Decal	"Q" medium 110mm
5022119		2	Plug	

© 2025 Jost