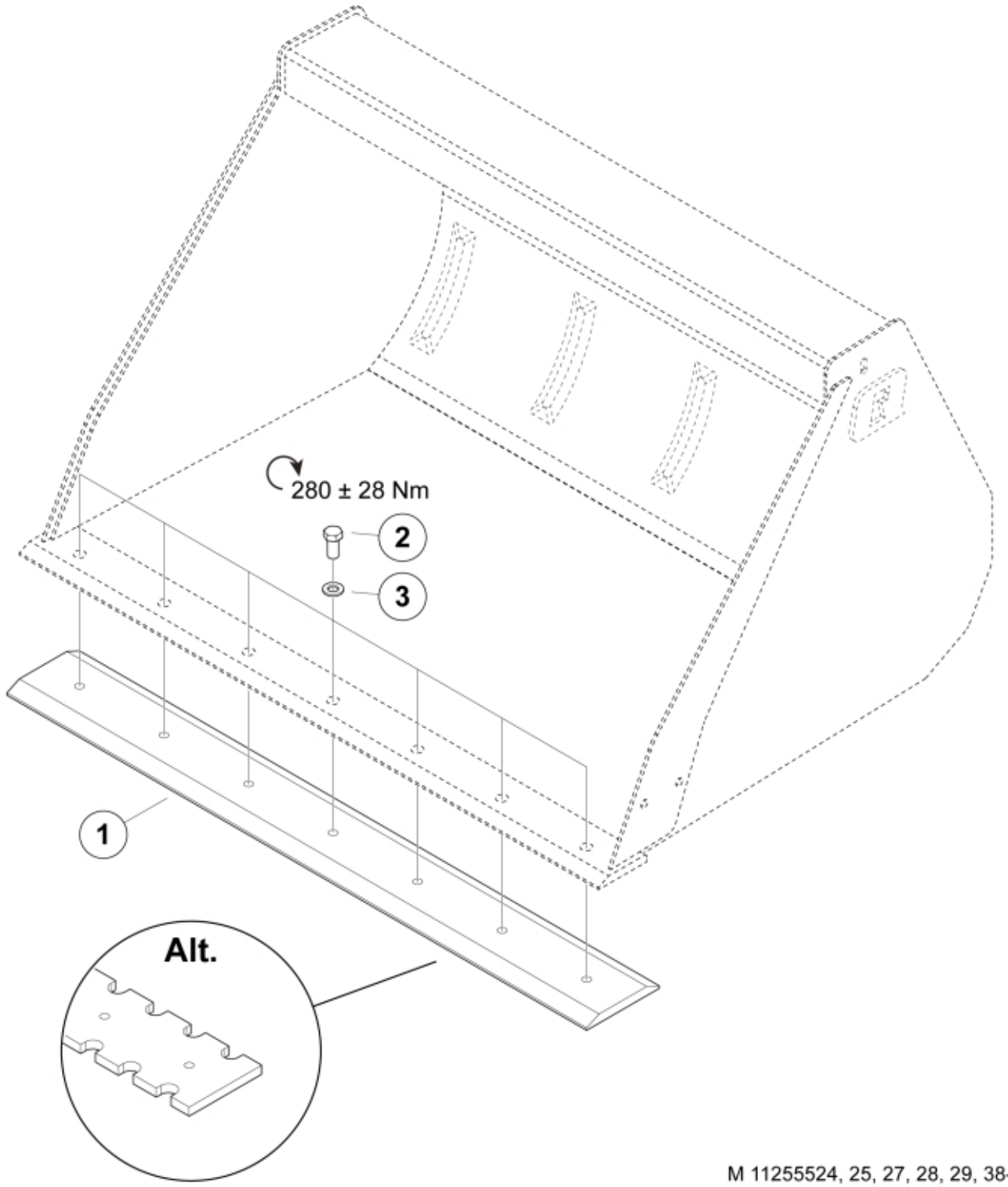

M 11255524, 25, 27, 28, 29, 38-42

© 2025 Jost

Description	90
Part assemblies	Bolt on Cutting Edge kit 90

PartNo	Pos	Qty	Name	Specifications
60046980-22	1	1	Cutting edge	
		1	Bolt kit	
5051801	2	5	• Screw	M6S M16x1.5x35
5013105	3	5	• Washer	BRB 17 x 30 x 3 300HV

© 2025 Jost