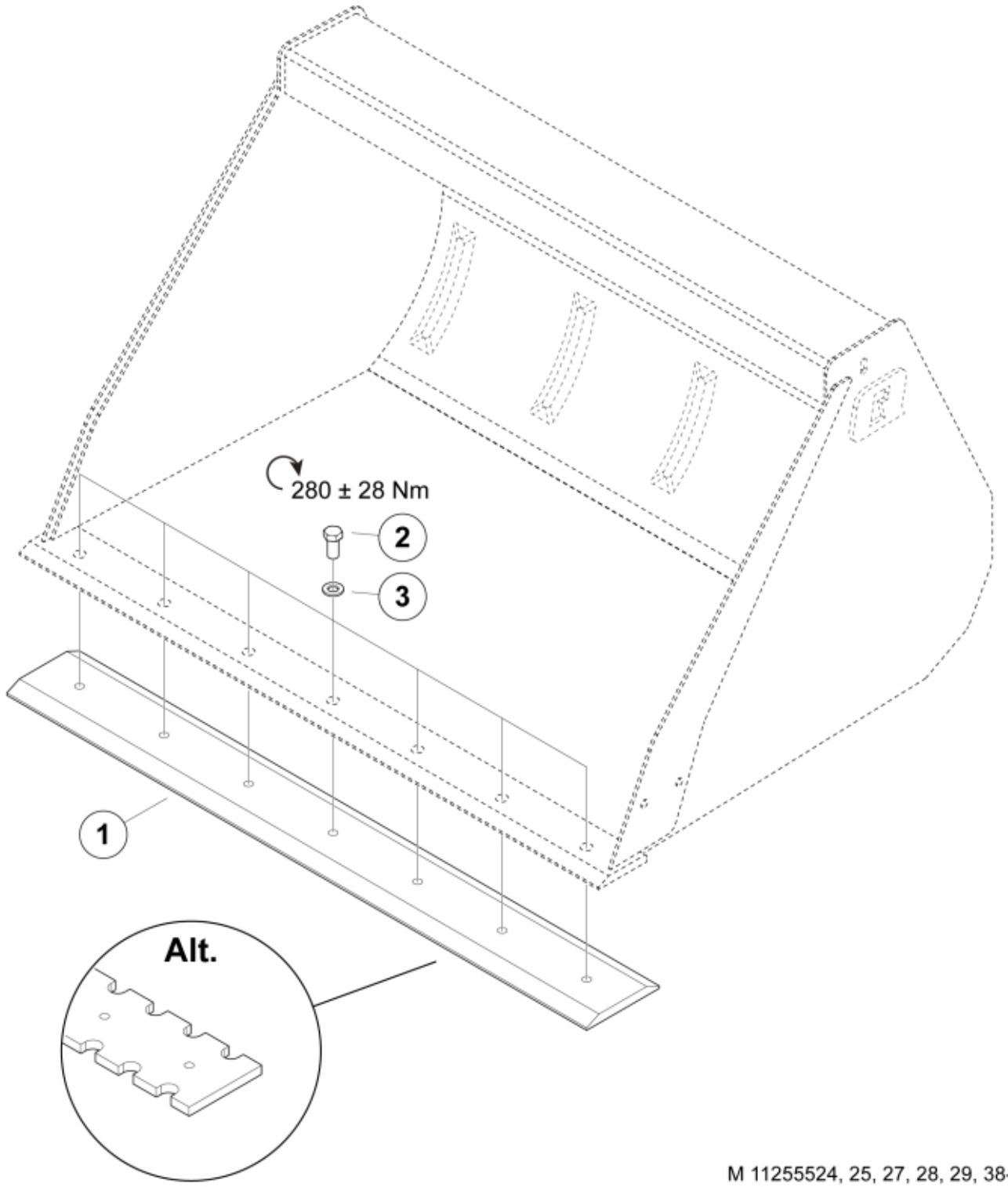

M 11255524, 25, 27, 28, 29, 38-42

© 2025 Jost

Description	140
Part assemblies	Bolt on Cutting Edge kit 140

PartNo	Pos	Qty	Name	Specifications
11255528D		1	Bolt on Cutting Edge kit 140	
60047018-22	1	1	Cutting edge	
		1	Bolt kit	
5051801	2	9	• Screw	M6S M16x1.5x35
5013105	3	9	• Washer	BRB 17 x 30 x 3 300HV

© 2025 Jost