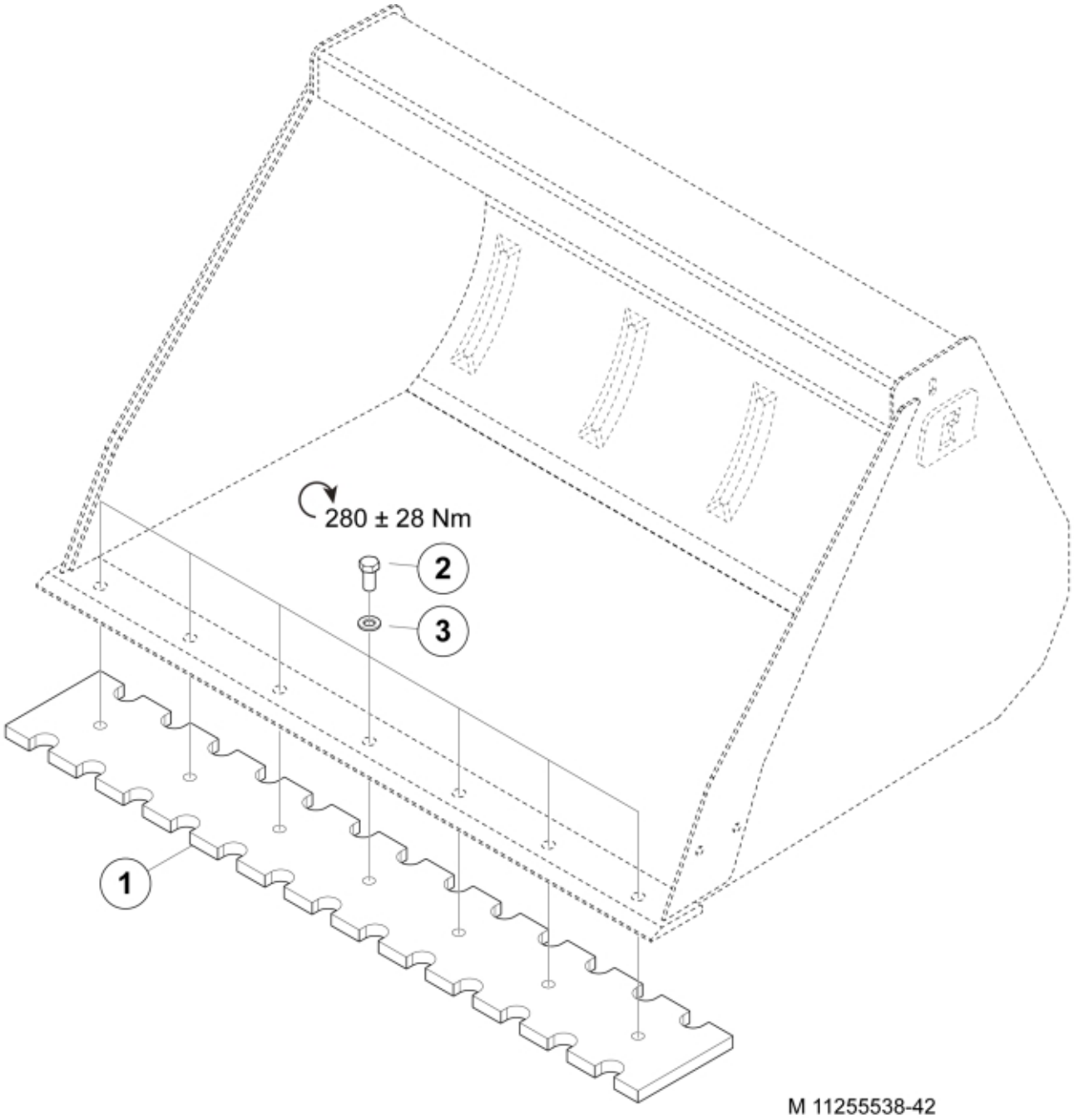



© 2025 Jost

| | |
|---|---|
| **Description** | 100 |
| **Part assemblies** | Bolt on Serrated Cutting Edge kit 100 |

| PartNo | Pos | Qty | Name | Specifications |
|---|---|---|---|---|
| 11255539 | | 1 | Bolt on Serrated Cutting Edge kit 100 | |
| 60047039-22 | 1 | 1 PCS | Serrated cutting edge | |
| | | 1 | Bolt kit | |
| 5051801 | 2 | 7 | • Screw | M6S M16x1.5x35 |
| 5013105 | 3 | 7 | • Washer | BRB 17 x 30 x 3 300HV |


© 2025 Jost