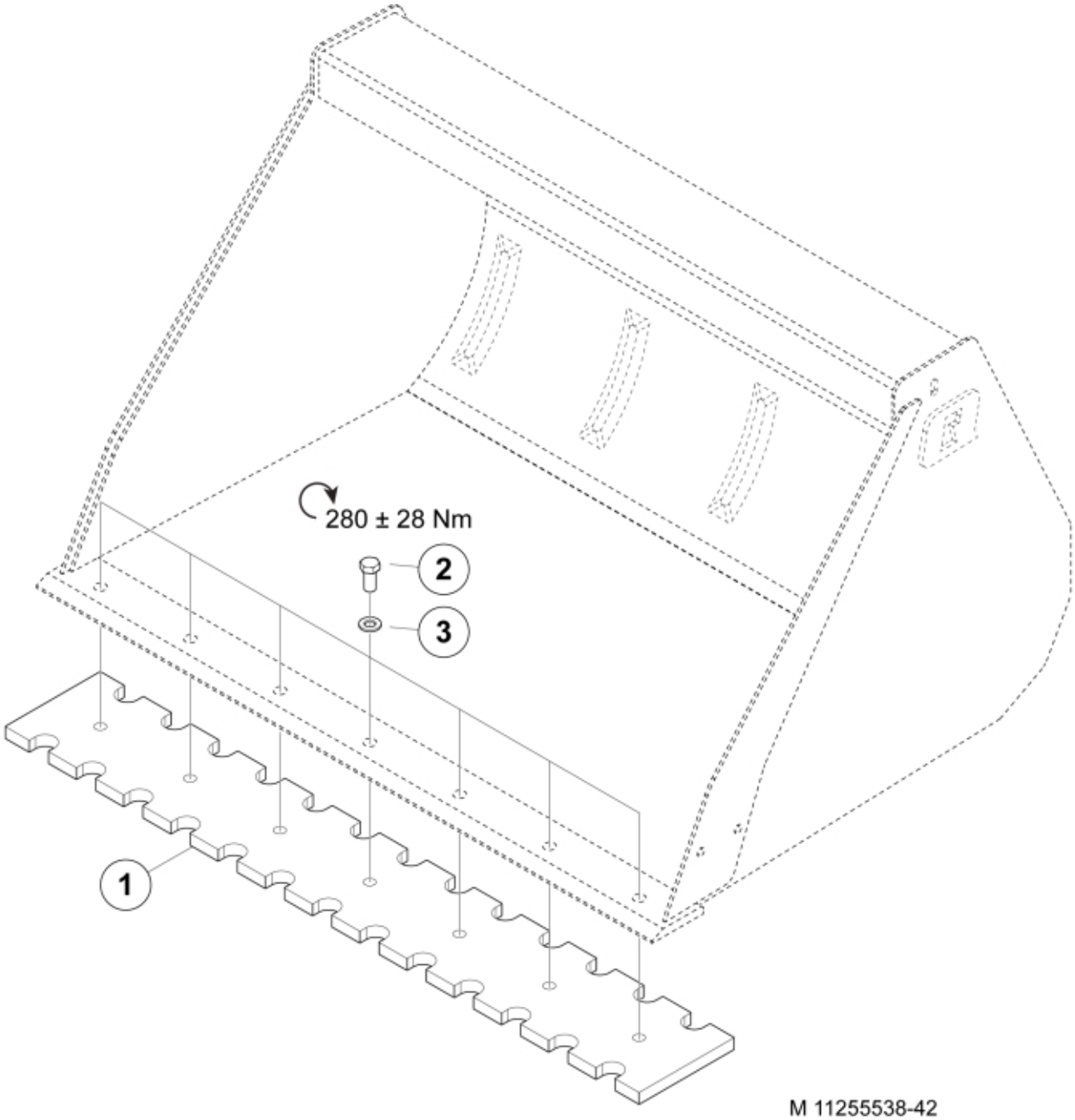

© 2025 Jost

Description	120
Part assemblies	Bolt on Serrated Cutting Edge kit 120

PartNo	Pos	Qty	Name	Specifications
11255540		1	Bolt on Serrated Cutting Edge kit 120	
60047040-22	1	1 PCS	Serrated cutting edge	
		1	Bolt kit	
5051801	2	7	• Screw	M6S M16x1.5x35
5013105	3	7	• Washer	BRB 17 x 30 x 3 300HV

© 2025 Jost