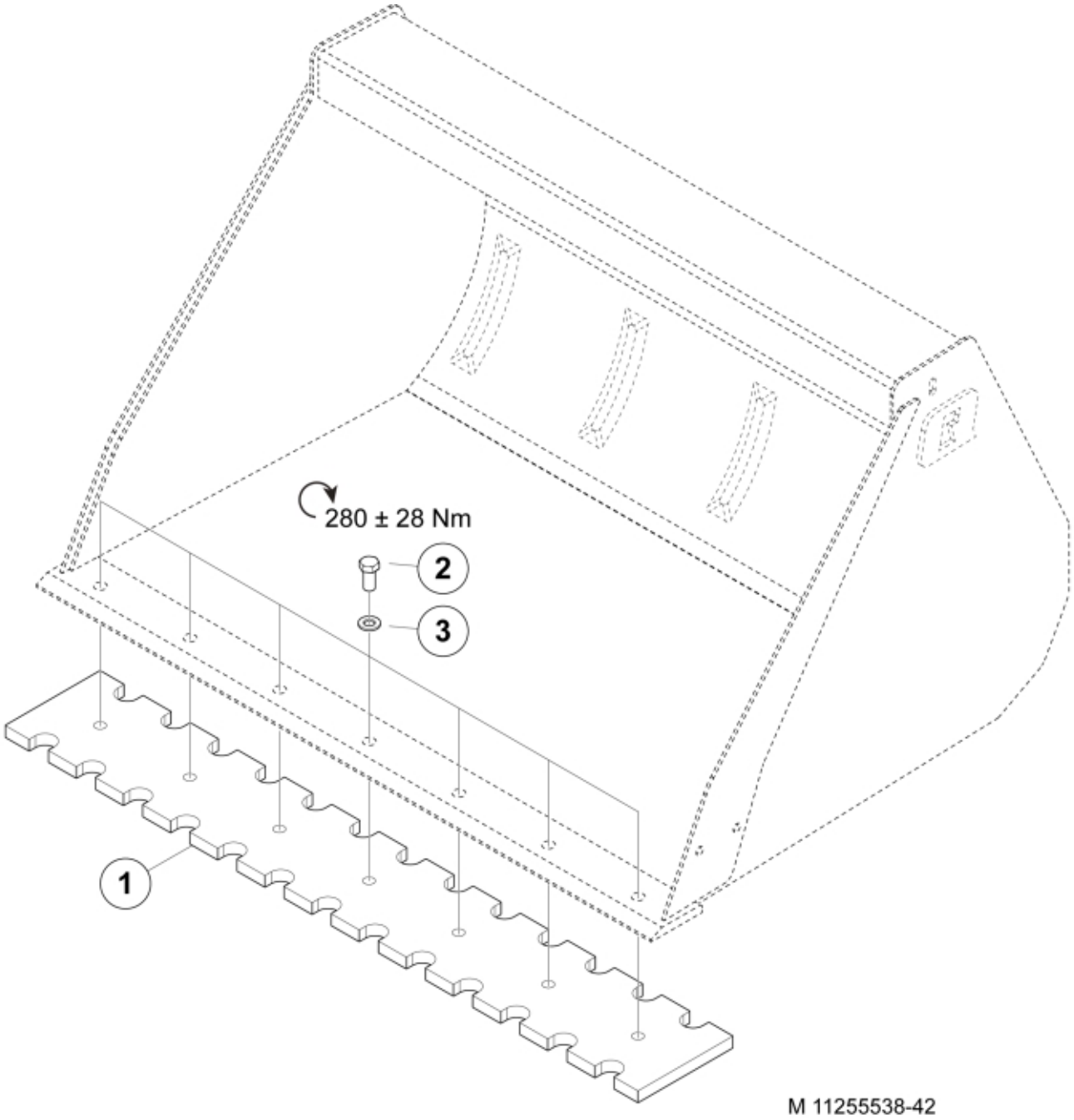

© 2025 Jost

Description	140
Part assemblies	Bolt on Serrated Cutting Edge kit 140

PartNo	Pos	Qty	Name	Specifications
11255541		1	Bolt on Serrated Cutting Edge kit 140	
60047041-22	1	1 PCS	Serrated cutting edge	
		1	Bolt kit	
5051801	2	9	• Screw	M6S M16x1.5x35
5013105	3	9	• Washer	BRB 17 x 30 x 3 300HV

© 2025 Jost