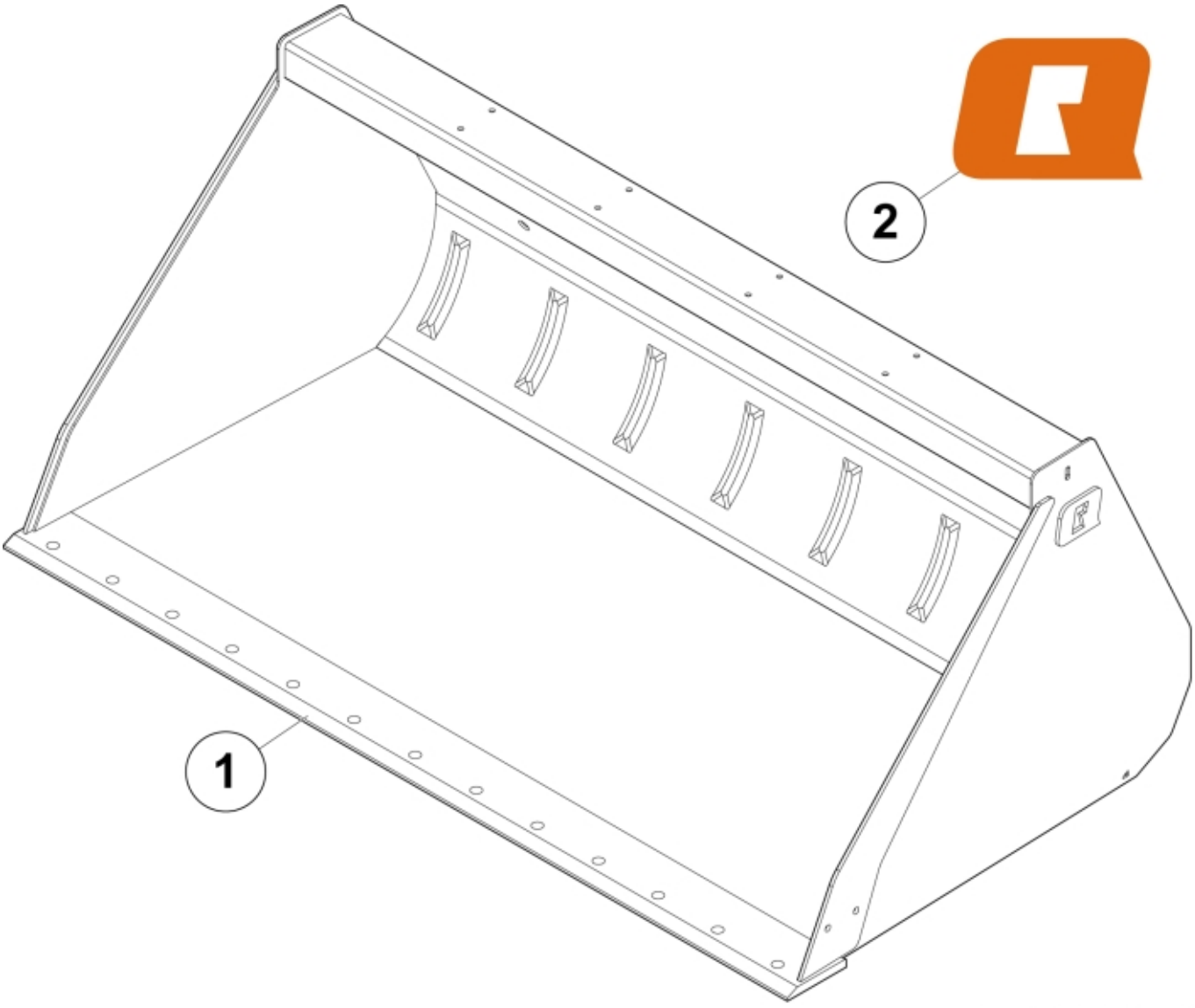

r11255548-11255551

© 2025 Jost

Part assemblies	Bucket GM+ 240
Specification	Year From: 5/1/2020 12:00:00 AM

PartNo	Pos	Qty	Name	Specifications
11255551		1	Bucket GM+ 240	5/1/2020 12:00:00 AM
60044371	1	1	Cutting edge	
60056616	2	2	Decal	"Q" medium 110mm
5022119		2	Plug	

© 2025 Jost