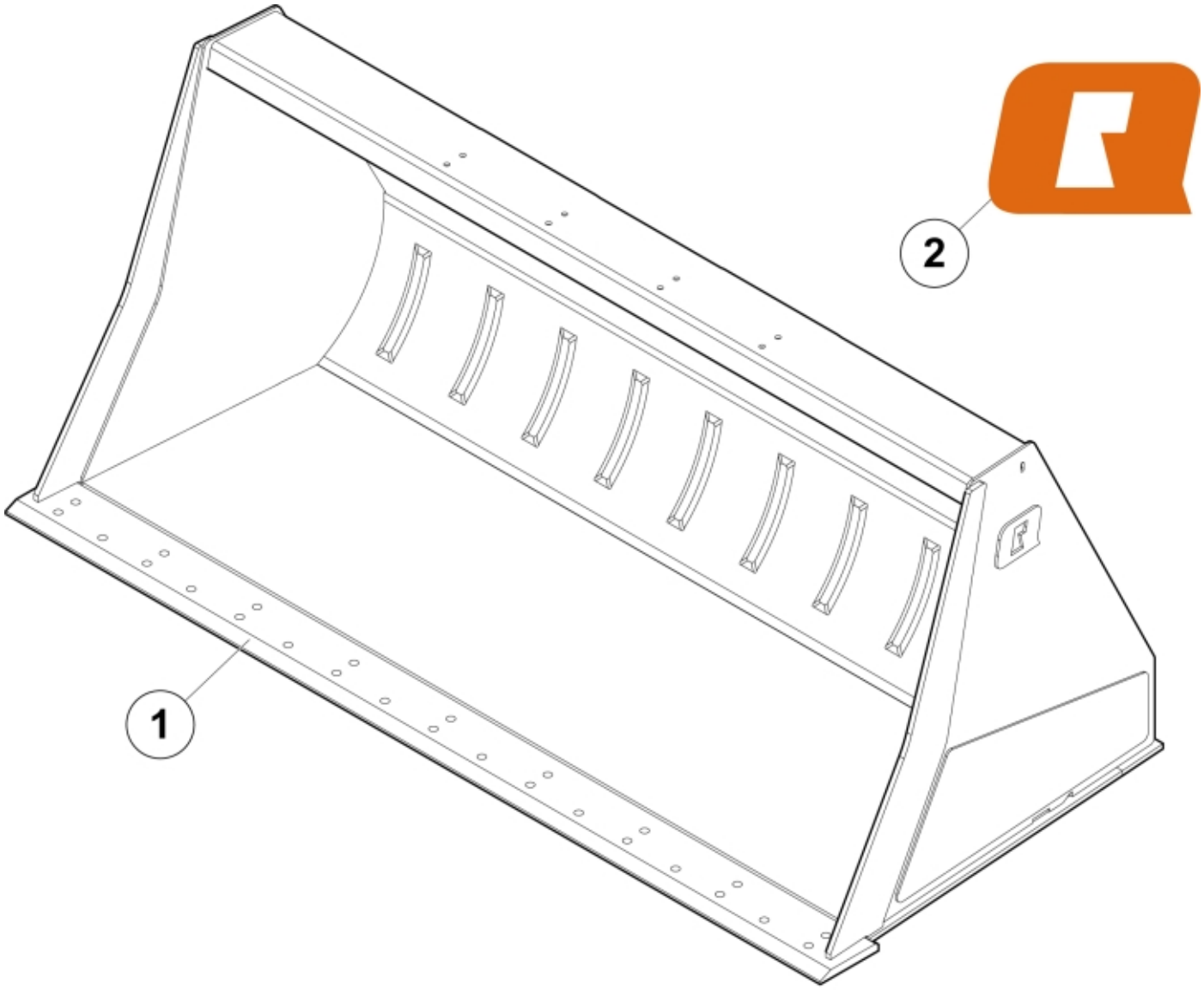

r11255637-11255638

© 2025 Jost

Part assemblies	Bucket SXL+ 295
Specification	Year From: 3/1/2020 12:00:00 AM

PartNo	Pos	Qty	Name	Specifications
11255638		1	Bucket SXL+ 295	3/1/2020 12:00:00 AM
60029131	1	1	Cutting edge	
60056248	2	2	Decal	"Q" Large 158 mm
5022119		2	Plug	

© 2025 Jost