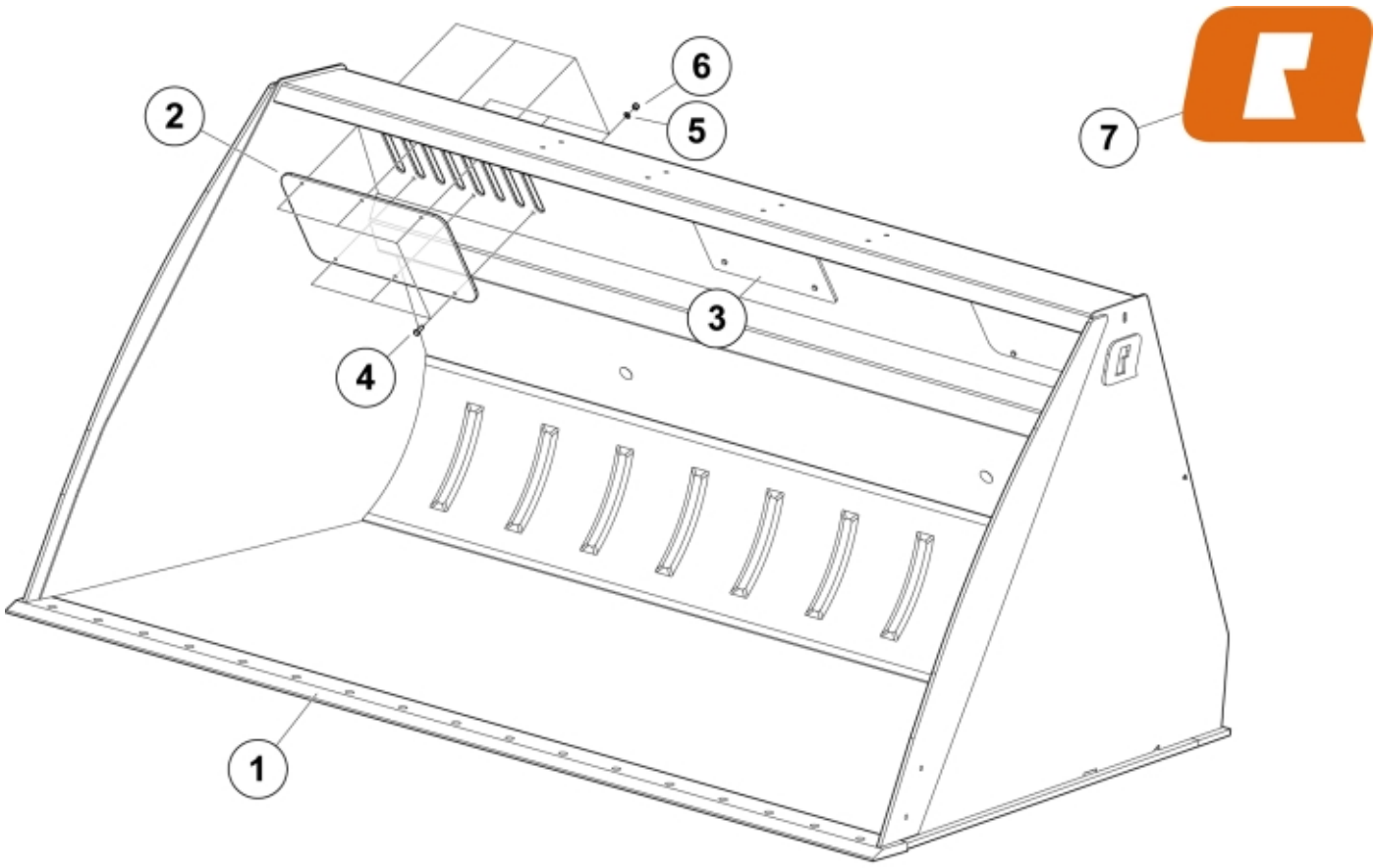

r11255642-44-45-46

© 2025 Jost

Part assemblies	Bucket VXL+ 285
Specification	Year From: 3/1/2020 12:00:00 AM

PartNo	Pos	Qty	Name	Specifications
11255645		1	Bucket VXL+ 285	
60049471	1	1 PCS	Cutting edge	
60048248	2	2	Cover plate	Plastic
60048168	3	1	Cover plate	Plastic
5002052	4	16	Screw	M6S M8x25
5013101	5	16	Washer	BRB 8,4 x 16
5011553	6	16	Nut	M6M M8 Loc-king
60056248	7	2	Decal	"Q" Large 158 mm
5022119		2	Plug	

© 2025 Jost