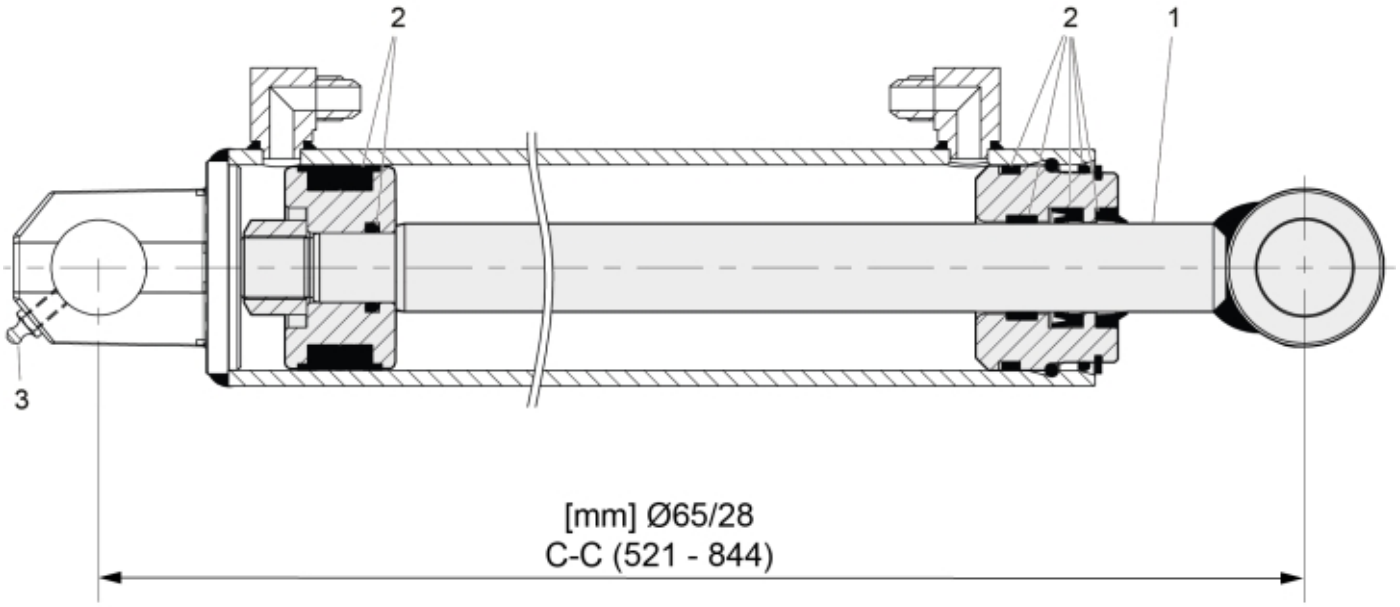

r60005398

© 2025 Jost

Description	65/28
Part assemblies	Cylinder
Specification	Specification: Glossy Black. Replaces 12725110-1

PartNo	Pos	Qty	Name	Specifications
60049930	1	1	Piston rod cpl.	
60049918	2	1	Seal kit	
5021901	3	1	Grease fitting	M6

© 2025 Jost