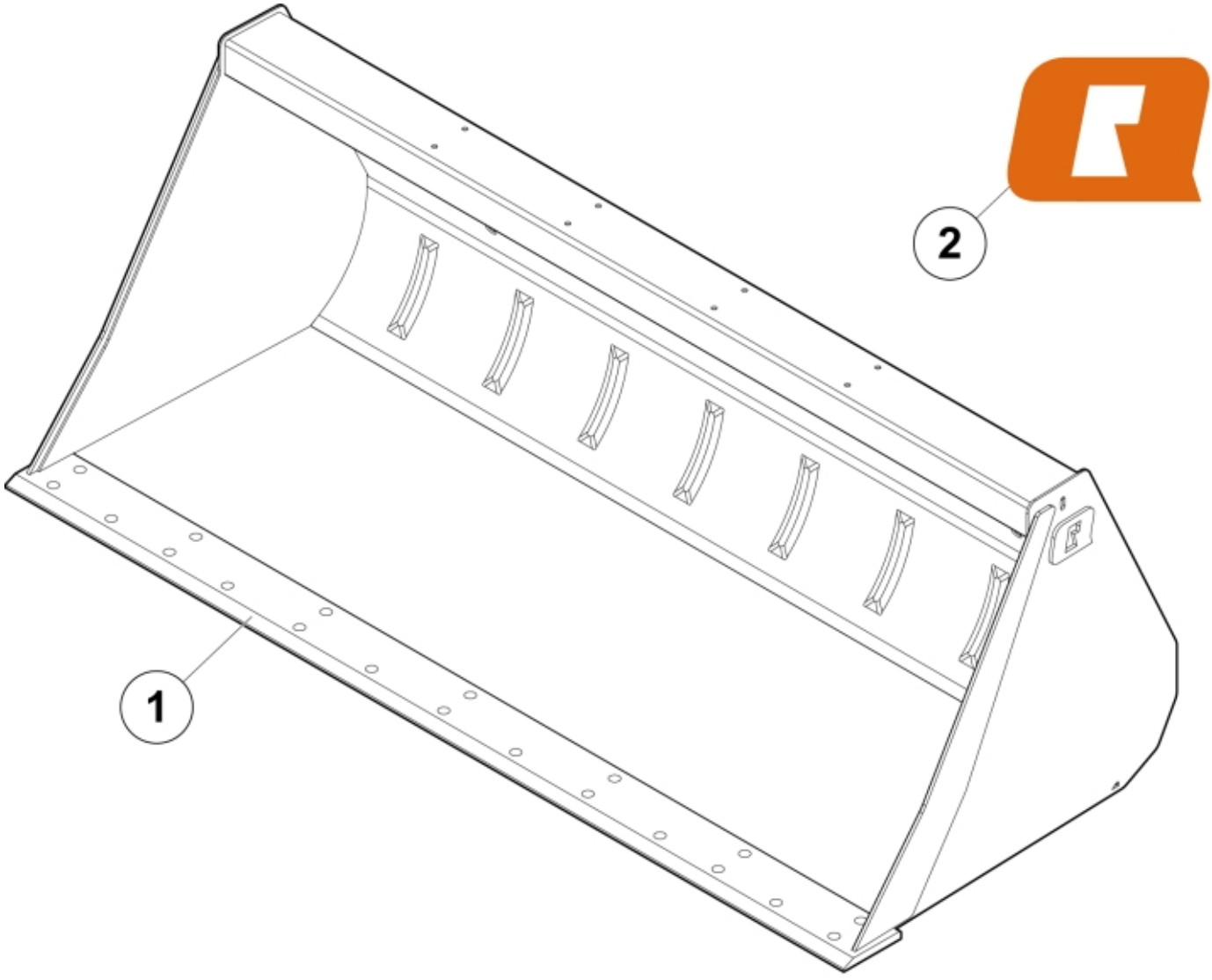

r11255552-557
r11255594-605

© 2025 Jost

Part assemblies	Bucket SM+ 200 SMS
Specification	Year From: 5/1/2020 12:00:00 AM
	Year To: 11/30/2022 12:00:00 AM

PartNo	Pos	Qty	Name	Specifications
11255599		1	Bucket SM+ 200 SMS	5/1/2020 12:00:00 AM, 11/30/2022 12:00:00 AM
60046975	1	1	Cutting edge	
60056616	2	2	Decal	"Q" medium 110mm
5022119		2	Plug	

© 2025 Jost