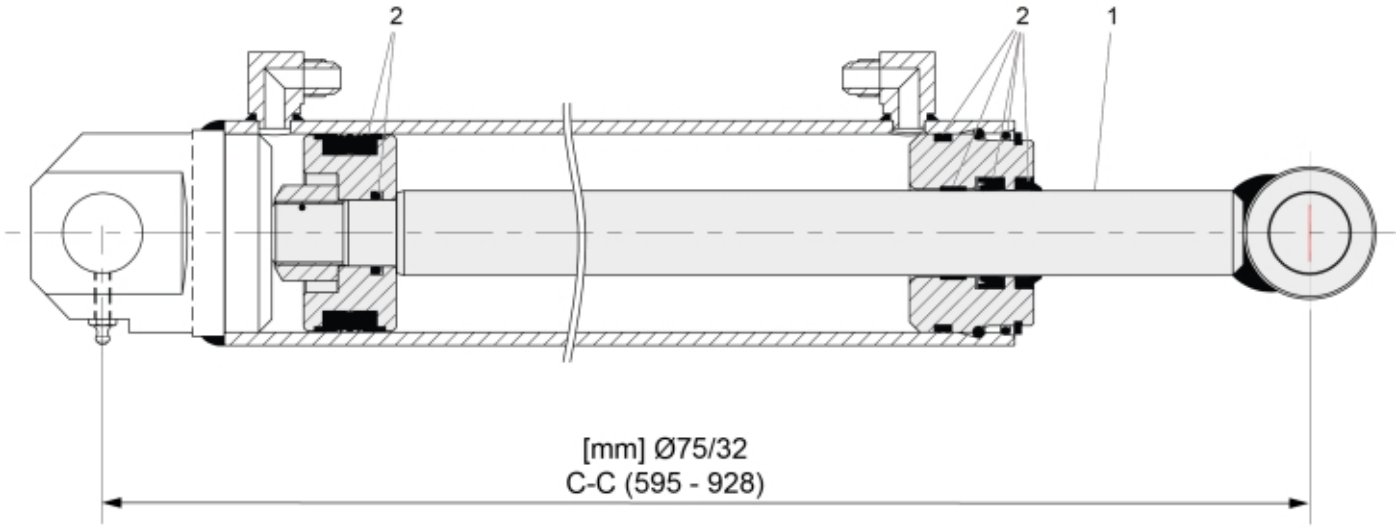

r60007558

© 2025 Jost

Description	75/32
Part assemblies	Cylinder
Specification	Specification: Glossy Black. Replaces 12722910-1

PartNo	Pos	Qty	Name	Specifications
60049923	1	1	Piston rod cpl.	
60049911	2	1	Seal kit	

© 2025 Jost