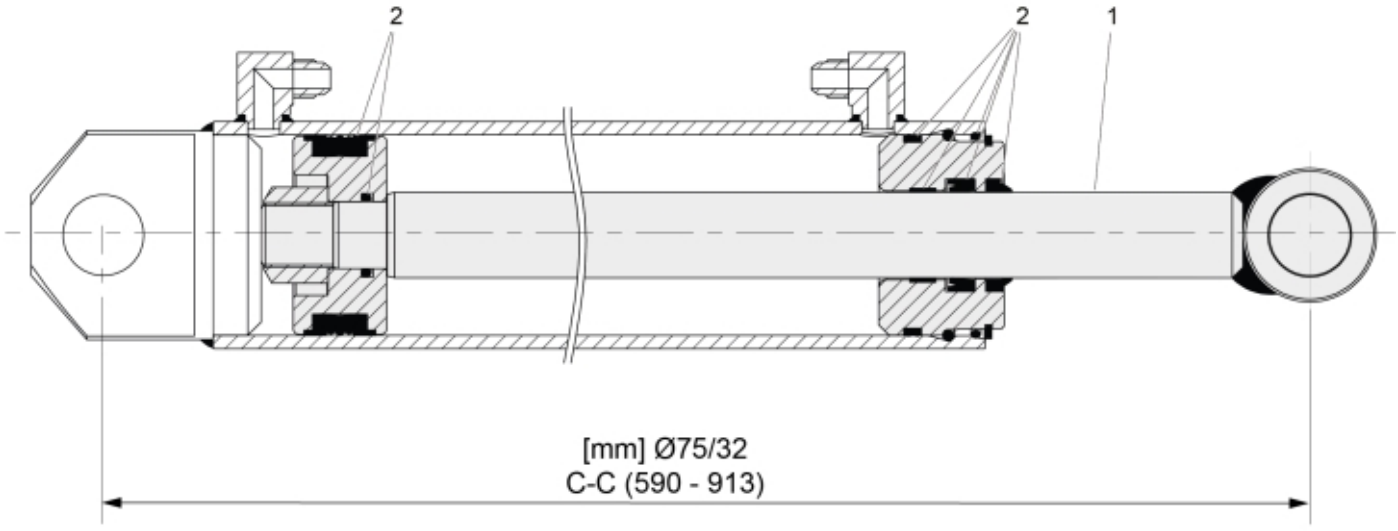

r60007572

© 2025 Jost

Description	75/32
Part assemblies	Cylinder

PartNo	Pos	Qty	Name	Specifications
60049924	1	1	Piston rod cpl.	
60049911	2	1	Seal kit	

© 2025 Jost