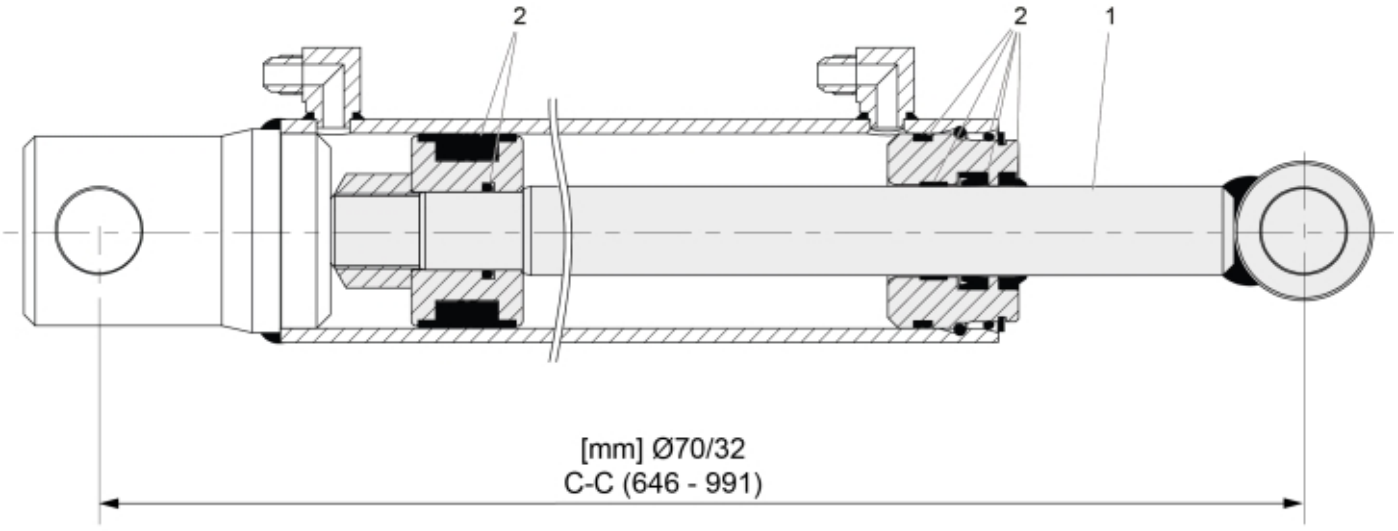

r60007557

© 2025 Jost

Description	70/32
Part assemblies	Cylinder
Specification	Specification: Glossy Black. Replaces 12722810-1

PartNo	Pos	Qty	Name	Specifications
60049922	1	1	Piston rod cpl.	
60049910	2	1	Seal kit	

© 2025 Jost