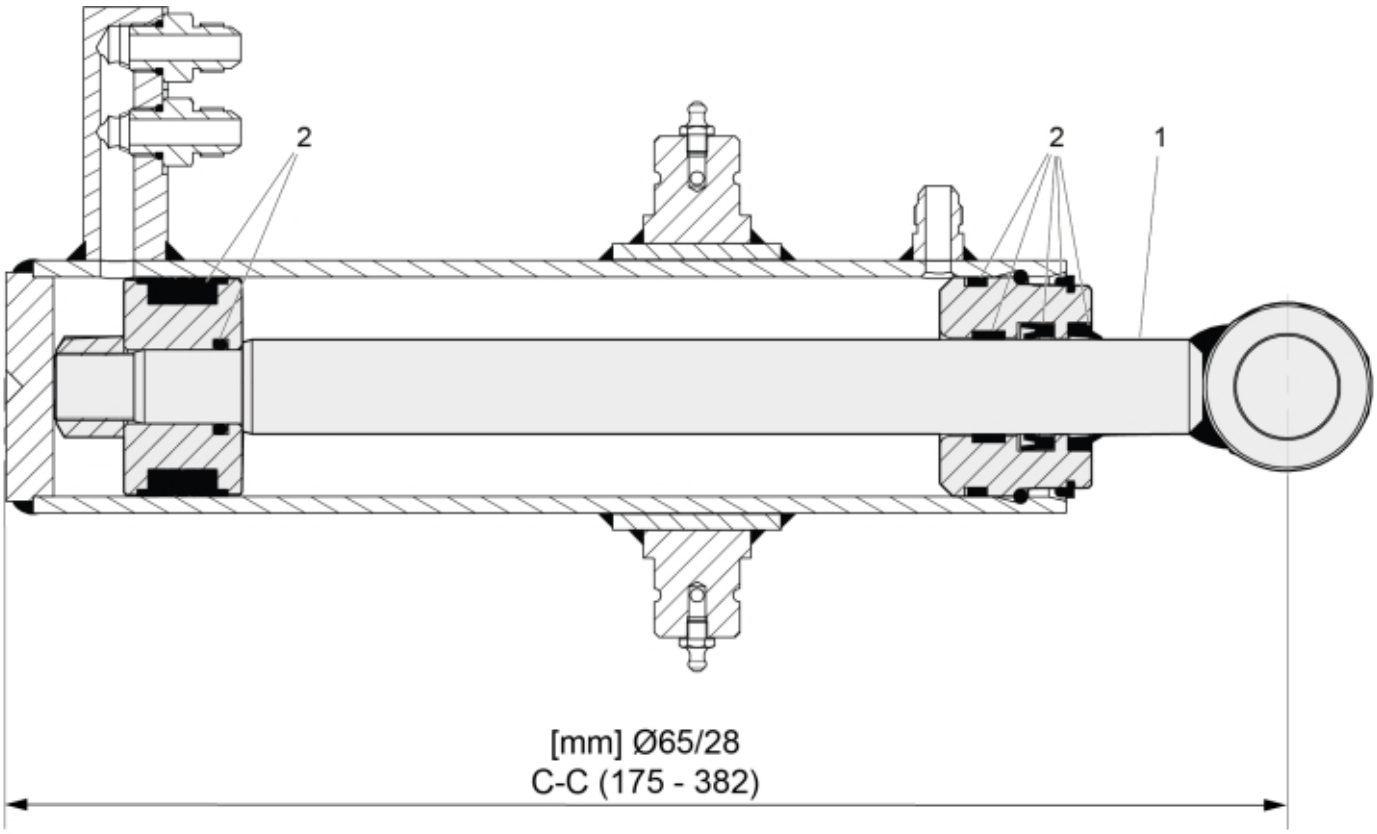

r60046206

© 2025 Jost

Description	65/28
Part assemblies	Cylinder
Specification	Specification: Glossy Black. Replaces 60007586-1

PartNo	Pos	Qty	Name	Specifications
60050992	1	1	Piston rod cpl.	
60049918	2	1	Seal kit	

© 2025 Jost