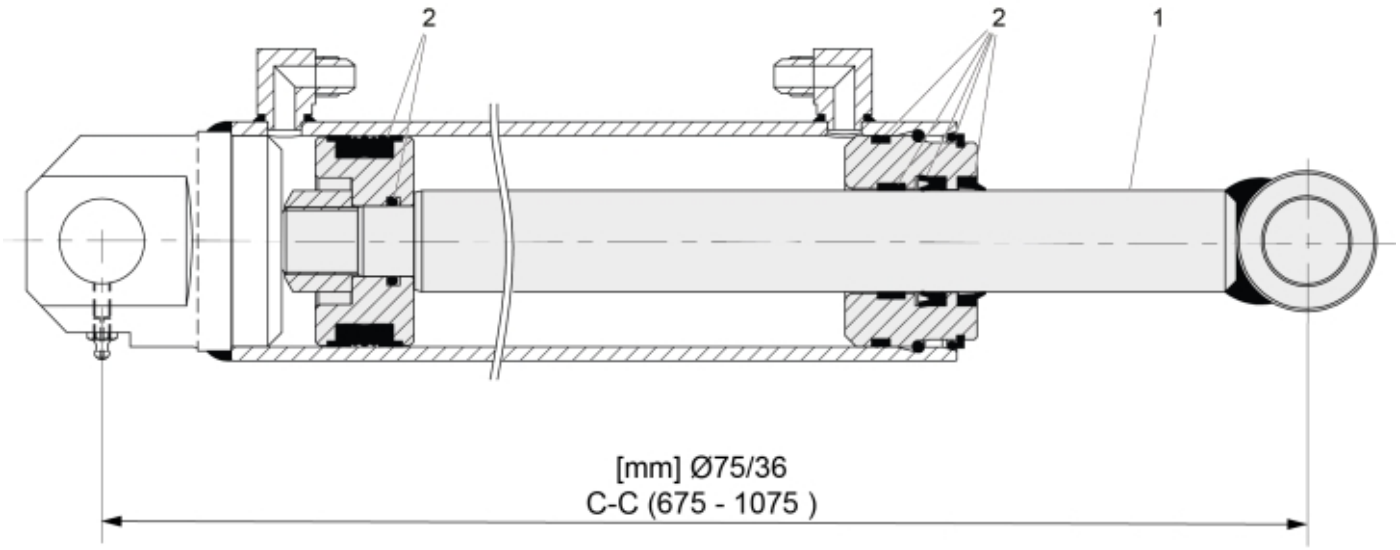

r60007583

© 2025 Jost

Description	75/36
Part assemblies	Cylinder
Specification	Specification: Glossy Black. Replaces 12723210-1

PartNo	Pos	Qty	Name	Specifications
60049926	1	1	Piston rod cpl.	
60049914	2	1	Seal kit	

© 2025 Jost